R&S®SMCV100B Vector Signal Generator Getting Started

1432704602
Version 06

ROHDE&SCHWARZ
Make ideas real

This document describes the R&S®SMCV100B, stock no. 1432.7000.02 and its options.

© 2023 Rohde & Schwarz GmbH & Co. KG
Muehldorfstr. 15, 81671 Muenchen, Germany
Phone: +49 89 41 29 - 0
Email: info@rohde-schwarz.com
Internet: www.rohde-schwarz.com
Subject to change – data without tolerance limits is not binding.
R&S® is a registered trademark of Rohde & Schwarz GmbH & Co. KG.
The terms HDMI, HDMI High-Definition Multimedia Interface, HDMI trade dress and the HDMI Logos are trademarks or registered trademarks of HDMI Licensing Administrator, Inc.
All other trademarks are the properties of their respective owners.

1432.7046.02 | Version 06 | R&S®SMCV100B

The following abbreviations are used throughout this manual: R&S®SMCV100B is abbreviated as R&S SMCV100B, R&S®WinIQSIM2™ is abbreviated as R&S WinIQSIM2, R&S®VISA is abbreviated as R&S VISA.

Contents

1 Safety and regulatory information..... 7
1.1 Safety instructions.....7
1.2 Labels on R&S SMCV100B.....10
1.3 Warning messages in the documentation..... 10
1.4 Korea certification class B..... 11
2 Documentation overview..... 12
2.1 Getting started manual.....12
2.2 User manuals and help.....12
2.3 Service manual.....13
2.4 Instrument security procedures..... 13
2.5 Printed safety instructions.....13
2.6 Data sheets and brochures..... 13
2.7 Release notes and open source acknowledgment (OSA).....14
2.8 Application notes, application cards, white papers, etc..... 14
3 Key features..... 15
4 Preparing for use..... 16
4.1 Lifting and carrying..... 16
4.2 Unpacking and checking.....16
4.3 Choosing the operating site..... 16
4.4 Setting up the R&S SMCV100B..... 17
4.5 Considerations for test setup..... 19
4.6 Connecting to power..... 20
4.7 Connecting to LAN..... 20
4.8 Connecting a monitor.....21

4.9 Connecting USB devices..... 22
4.10 Connecting to RF coaxial connectors..... 23
4.11 Connecting to RF 50 Ω..... 25
4.12 Connecting to Ref In/Ref Out.....25
4.13 Connecting to Dig. IQ HS x..... 26
4.14 Connecting to IP Data.....27
4.15 Switching on or off..... 28

5 Instrument tour..... 31
5.1 Front panel tour..... 31
5.2 Rear panel tour.....35

6 Trying out the instrument..... 39
6.1 Generating an unmodulated carrier.....40
6.2 Generating a digitally modulated signal.....42
6.3 Triggering the instrument with an external signal.....44
6.4 Enabling and configuring a marker signal..... 50
6.5 Verifying the generated signal with the graphics display.....51
6.6 Saving and recalling settings..... 55
6.7 Generating a DAB signal.....58

7 System overview.....61
7.1 Brief introduction to the instrument's concept.....61
7.2 Signal flow at a glance..... 61
7.3 Internal baseband source ("Baseband" block).....63
7.4 Digital baseband input/output ("BB input"/ "I/Q digital" block)..... 63
7.5 Additional white gaussian noise ("AWGN" block).....64
7.6 "I/Q stream mapper" block.....64
7.7 I/Q modulator ("I/Q mod" block).....65

7.8 RF ("RF" block)..... 65
7.9 Applications examples of the R&S SMCV100B.....65

8 Instrument control..... 66
8.1 Possible ways to operate the instrument..... 66
8.2 Means of manual interaction..... 67
8.3 Understanding the display information..... 67
8.4 Accessing the functionality..... 73
8.5 Entering data..... 74
8.6 Getting information and help.....76
8.7 Remote control.....78
8.8 Remote operation over VNC..... 79

9 Contacting customer support..... 80

Index..... 81

1 Safety and regulatory information

The product documentation helps you use the product safely and efficiently. Follow the instructions provided here and in the following chapters.

Intended use

The product is intended for the development, production and verification of electronic components and devices in industrial, administrative, and laboratory environments. Use the product only for its designated purpose.

Observe the operating conditions and performance limits stated in the data sheet.

Where do I find safety information?

Safety information is part of the product documentation. It warns you of potential dangers and gives instructions on how to prevent personal injury or damage caused by dangerous situations. Safety information is provided as follows:

- In Chapter 1.1, "Safety instructions", on page 7. The same information is provided in many languages as printed "Safety Instructions". The printed "Safety Instructions" are delivered with the product.
- Throughout the documentation, safety instructions are provided when you need to take care during setup or operation.

1.1 Safety instructions

Products from the Rohde & Schwarz group of companies are manufactured according to the highest technical standards. To use the products safely, follow the instructions provided here and in the product documentation. Keep the product documentation nearby and offer it to other users.

Use the product only for its intended use and within its performance limits. Intended use and limits are described in the product documentation such as the data sheet, manuals and the printed "Safety Instructions". If you are unsure about the appropriate use, contact Rohde & Schwarz customer service.

Using the product requires specialists or specially trained personnel. These users also need sound knowledge of at least one of the languages in which the user interfaces and the product documentation are available.

Never open the casing of the product. Only service personnel authorized by Rohde & Schwarz are allowed to repair the product. If any part of the product is damaged or broken, stop using the product. Contact Rohde & Schwarz customer service at http://www.customersupport.rohde-schwarz.com.

Lifting and carrying the product

The maximum weight of the product is provided in the data sheet. To move the product safely, you can use lifting or transporting equipment such as lift trucks and forklifts. Follow the instructions provided by the equipment manufacturer.

Choosing the operating site

Only use the product indoors. The product casing is not waterproof. Water that enters can electrically connect the casing with live parts, which can lead to electric shock, serious personal injury or death if you touch the casing. If Rohde & Schwarz provides accessories designed for your product, e.g. a carrying bag, you can use the product outdoors.

Unless otherwise specified, you can operate the product up to an altitude of 2000 m above sea level. The product is suitable for pollution degree 2 environments where nonconductive contamination can occur. For more information on environmental conditions such as ambient temperature and humidity, see the data sheet.

Setting up the product

Always place the product on a stable, flat and level surface with the bottom of the product facing down. If the product is designed for different positions, secure the product so that it cannot fall over.

If the product has foldable feet, always fold the feet completely in or out to ensure stability. The feet can collapse if they are not folded out completely or if the product is moved without lifting it. The foldable feet are designed to carry the weight of the product, but not an extra load.

If stacking is possible, keep in mind that a stack of products can fall over and cause injury.

If you mount products in a rack, ensure that the rack has sufficient load capacity and stability. Observe the specifications of the rack manufacturer. Always install the products from the bottom shelf to the top shelf so that the rack stands securely. Secure the product so that it cannot fall off the rack.

Connecting to power

The product is an overvoltage category II product. Connect the product to a fixed installation used to supply energy-consuming equipment such as household appliances and similar loads. Keep in mind that electrically powered products have risks, such as electric shock, fire, personal injury or even death.

Take the following measures for your safety:

- Before switching on the product, ensure that the voltage and frequency indicated on the product match the available power source. If the power adapter does not adjust automatically, set the correct value and check the rating of the fuse.
- Only use the power cable delivered with the product. It complies with country-specific safety requirements. Only insert the plug into an outlet with protective conductor terminal.
- Only use intact cables and route them carefully so that they cannot be damaged. Check the power cables regularly to ensure that they are undamaged. Also ensure that nobody can trip over loose cables.
- If the product needs an external power supply, use the power supply that is delivered with the product or that is recommended in the product documentation or a power supply that conforms to the country-specific regulations.
- Only connect the product to a power source with a fuse protection of maximum 20 A.
- Ensure that you can disconnect the product from the power source at any time. Pull the power plug to disconnect the product. The power plug must be easily accessible. If the product is integrated into a system that does not meet these requirements, provide an easily accessible circuit breaker at the system level.

Cleaning the product

Use a dry, lint-free cloth to clean the product. When cleaning, keep in mind that the casing is not waterproof. Do not use liquid cleaning agents.

Meaning of safety labels

Safety labels on the product warn against potential hazards.

	Potential hazard Read the product documentation to avoid personal injury or product damage.
	Electrical hazard Indicates live parts. Risk of electric shock, fire, personal injury or even death.
	Hot surface Do not touch. Risk of skin burns. Risk of fire.
	Protective conductor terminal Connect this terminal to a grounded external conductor or to protective ground. This connection protects you against electric shock if an electric problem occurs.

1.2 Labels on R&S SMCV100B

Labels on the casing inform about:

- Personal safety, see "Connecting to power" on page 9.
- Product and environment safety, see Table 1-1.
- Identification of the product, see the serial number on the rear panel.

Table 1-1: Labels regarding R&S SMCV100B and environment safety

	Labeling in line with EN 50419 for disposal of electrical and electronic equipment after the product has come to the end of its service life. For more information, see the product user manual, chapter "Disposal".

1.3 Warning messages in the documentation

A warning message points out a risk or danger that you need to be aware of. The signal word indicates the severity of the safety hazard and how likely it will occur if you do not follow the safety precautions.

WARNING

Potentially hazardous situation. Could result in death or serious injury if not avoided.

CAUTION

Potentially hazardous situation. Could result in minor or moderate injury if not avoided.

NOTICE

Potential risks of damage. Could result in damage to the supported product or to other property.

1.4 Korea certification class B

이 기기는 가정용(B급) 전자파 적합기기로서 주로 가정에서 사용하는 것을 목적으로 하며, 모든 지역에서 사용할 수 있습니다.

2 Documentation overview

This section provides an overview of the R&S SMCV100B user documentation. Unless specified otherwise, you find the documents at:

www.rohde-schwarz.com/manual/smcv100b

2.1 Getting started manual

Introduces the R&S SMCV100B and describes how to set up and start working with the product. Includes basic operations, typical measurement examples, and general information, e.g. safety instructions, etc. A printed version is delivered with the instrument.

2.2 User manuals and help

Separate manuals for the base unit and the software options are provided for download:

- Base unit manual
  Contains the description of all instrument modes and functions. It also provides an introduction to remote control, a complete description of the remote control commands with programming examples, and information on maintenance, instrument interfaces and error messages. Includes the contents of the getting started manual.
- Software option manual
  Contains the description of the specific functions of an option. Basic information on operating the R&S SMCV100B is not included.

The contents of the user manuals are available as help in the R&S SMCV100B. The help offers quick, context-sensitive access to the complete information for the base unit and the software options.

All user manuals are also available for download or for immediate display on the Internet.

2.3 Service manual

Describes the performance test for checking compliance with rated specifications, firmware update, troubleshooting, adjustments, installing options and maintenance.

The service manual is available for registered users on the global Rohde & Schwarz information system (GLORIS):

https://gloris.rohde-schwarz.com

2.4 Instrument security procedures

Deals with security issues when working with the R&S SMCV100B in secure areas. It is available for download on the internet.

2.5 Printed safety instructions

Provides safety information in many languages. The printed document is delivered with the product.

2.6 Data sheets and brochures

The data sheet contains the technical specifications of the R&S SMCV100B. It also lists the options and their order numbers and optional accessories.

The brochure provides an overview of the instrument and deals with the specific characteristics.

See www.rohde-schwarz.com/brochure-datasheet/smcv100b

2.7 Release notes and open source acknowledgment (OSA)

The release notes list new features, improvements and known issues of the current firmware version, and describe the firmware installation.

The software makes use of several valuable open source software packages. An open-source acknowledgment document provides verbatim license texts of the used open source software.

See www.rohde-schwarz.com/firmware/smcv100b

2.8 Application notes, application cards, white papers, etc.

These documents deal with special applications or background information on particular topics.

See www.rohde-schwarz.com/application/smcv100b

3 Key features

The R&S SMCV100B is a new signal generator in the economy range developed to meet demanding customer requirements. Offering excellent signal characteristic and straightforward and intuitive operation, the signal generator makes signal generation fast and easy.

Outstanding key features of the R&S SMCV100B are:

- First multi-standard platform for broadcast, navigation, cellular and wireless applications
- Fully software-defined vector signal generator
- Modern RF signal generation concept from 8 kHz to 7.125 GHz
- High RF output power of up to 25 dBm
- Modulation bandwidth up to 240 MHz with internal baseband
- Powerful internal baseband generator with internal broadcast real-time coder, Custom Digital Modulation and internal baseband signal generation with ARB
- Support of various broadcast standards covering multiple fields of application:
  - Terrestrial broadcast: ATSC 3.0, ATSC-M/H, DTMB, DVB-T2, DVB-T, ISDB-T, ISDB-T_{SB}, T-DMB/DAB
  - Satellite broadcast: DVB-S2, DVB-S
  - Cable broadcast: DVB-C, J.83/B
  - Audio broadcast: DRM/DRM+, Audio AM/FM, RDS/RDBS/DARC
- Support of digital standard waveforms such as 5G NR, LTE including eMTC/NB-IoT, WLAN IEEE 802.11a/b/g/n/j/p/ac/ax/be, GNSS
- Intuitive operation via 5" touchscreen with block diagram as key element
- Graphical signal monitoring at practically every point in the signal flow
- SCPI macro recorder and code generator for generating executable remote control code from manual operating steps (for MATLAB®, CVI, etc.)
- Easily extendable with software options
- Full remote compatibility with R&S SFE/R&S SFE100

For more information, see data sheet.

4 Preparing for use

Here, you can find basic information about setting up the product for the first time.

4.1 Lifting and carrying

See "Lifting and carrying the product" on page 8.

4.2 Unpacking and checking

1. Unpack the R&S SMCV100B carefully.
2. Retain the original packing material. Use it to protect the control elements and connectors when transporting or shipping the R&S SMCV100B later.
   See also chapter "Transporting" in the user manual.
3. Using the delivery notes, check the equipment for completeness.
4. Check the equipment for damage.

   If the delivery is incomplete or equipment is damaged, contact Rohde & Schwarz.

4.3 Choosing the operating site

Specific operating conditions ensure proper operation and avoid damage to the product and connected devices. For information on environmental conditions such as ambient temperature and humidity, see the data sheet.

See also "Choosing the operating site" on page 8.

Electromagnetic compatibility classes

The electromagnetic compatibility (EMC) class indicates where you can operate the product. The EMC class of the product is given in the data sheet.

- Class B equipment is suitable for use in:
  - Residential environments
  - Environments that are directly connected to a low-voltage supply network that supplies residential buildings
- Class A equipment is intended for use in industrial environments. It can cause radio disturbances in residential environments due to possible conducted and radiated disturbances. It is therefore not suitable for class B environments.
  If class A equipment causes radio disturbances, take appropriate measures to eliminate them.

4.4 Setting up the R&S SMCV100B

See also:

- "Setting up the product" on page 8
- "Intended use" on page 7

4.4.1 Placing the R&S SMCV100B on a bench top

To place the product on a bench top

1. Place the product on a stable, flat and level surface. Ensure that the surface can support the weight of the product. For information on the weight, see the data sheet.
2. **CAUTION!** Foldable feet can collapse. See "Setting up the product" on page 8.

   Always fold the feet completely in or out. With folded-out feet, do not place anything on top or underneath the product.
3. **WARNING!** A stack of products can fall over and cause injury. Never stack more than three products on top of each other. Instead, mount them in a rack.

   Stack as follows:

   - If the products have foldable feet, fold them in completely.

- All products must have the same dimensions (width and length).
- Do not exceed a total load of 50 kg placed on the product at the bottom of the stack.

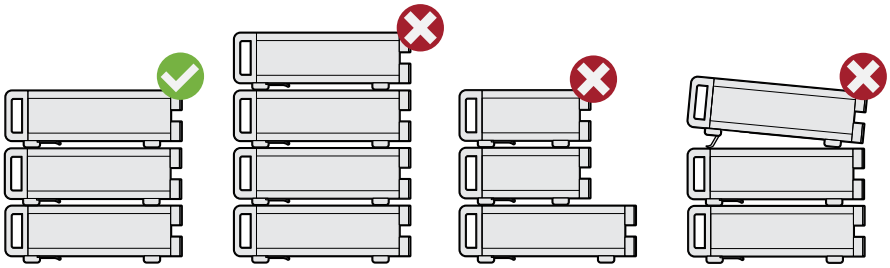

Left = Stacked correctly
Middle left = Stacked incorrectly, too many products
Middle right = Stacked incorrectly, different dimensions
Right = Stacked incorrectly, folded-out feet

4. **NOTICE!** Overheating can damage the product.

   Prevent overheating as follows:

   - Keep a minimum distance of 10 cm between the fan openings of the product and any object in the vicinity to provide sufficient airflow and ventilation.
   - Do not place the product next to heat-generating equipment such as radiators or other products.

4.4.2 Mounting the R&S SMCV100B in a rack

To prepare the rack

1. Observe the requirements and instructions in "Setting up the product" on page 8.
2. **NOTICE!** Insufficient airflow can cause overheating and damage the product.

   Design and implement an efficient ventilation concept for the rack.

To mount the R&S SMCV100B in a rack

1. Use an adapter kit that fits the dimensions of the R&S SMCV100B to prepare the instrument for rack mounting.

   a) Order the rack adapter kit designed for the R&S SMCV100B. For the order number, see data sheet.

b) Mount the adapter kit. Follow the assembly instructions provided with the adapter kit.

2. Lift the R&S SMCV100B to shelf height.
3. Push the R&S SMCV100B onto the shelf until the rack brackets fit closely to the rack.
4. Tighten all screws at the rack brackets with a tightening torque of 1.2 Nm to secure the R&S SMCV100B in the rack.

To unmount the R&S SMCV100B from a rack

1. Loosen the screws at the rack brackets.
2. Bring the lifting equipment to shelf height.
3. Remove the R&S SMCV100B from the rack.
4. If placing the R&S SMCV100B on a bench top again, unmount the adapter kit from the R&S SMCV100B. Follow the instructions provided with the adapter kit.

4.5 Considerations for test setup

Cable selection and electromagnetic interference (EMI)

Electromagnetic interference (EMI) can affect the measurement results.

To suppress electromagnetic radiation during operation:

- Use high-quality shielded cables, especially for the following connector types:
  - BNC
    Double-shielded BNC cables.
    How to: "To connect to pluggable connectors" on page 24
  - USB
    Double-shielded USB cables.
    How to: Chapter 4.9, "Connecting USB devices", on page 22.
  - LAN
    At least CAT6 STP cables.
    How to: Chapter 4.7, "Connecting to LAN", on page 20
- Always terminate open cable ends.

- Ensure that connected external devices comply with EMC regulations.
- Use the cable R&S DIGIQ-HS for connection to the Dig. IQ HS x interfaces of the instrument. The cable is available under order number 3641.2948.03.
  How to: Chapter 4.13, "Connecting to Dig. IQ HS x", on page 26
- Use an SFP+ to RJ-45 adapter and an RJ-45 cable for connection to the IP Data interface of the instrument. We recommend that you use the adapter "FCLF850P2BTL" from Finisar available under order number 3627.0570.00.
  How to: Chapter 4.14, "Connecting to IP Data", on page 27

Signal input and output levels

Information on signal levels is provided in the data sheet. Keep the signal levels within the specified ranges to avoid damage to the R&S SMCV100B and connected devices.

4.6 Connecting to power

For safety information, see "Connecting to power" on page 9.

1. Plug the AC power cable into the AC power connector on the rear panel. Only use the AC power cable delivered with the R&S SMCV100B.
2. Plug the AC power cable into a power outlet with ground contact.

   The required ratings are listed next to the AC power connector and in the data sheet.

4.7 Connecting to LAN

Network environment

Before connecting the product to a local area network (LAN), consider the following:

- Install the latest firmware to reduce security risks.
- For internet or remote access, use secured connections if applicable.

- Ensure that the network settings comply with the security policies of your company. Contact your local system administrator or IT department before connecting your product to your company LAN.
- When connected to the LAN, the product may potentially be accessed from the internet, which may be a security risk. For example, attackers might misuse or damage the product.

To connect to LAN

► Connect the LAN socket on the rear panel via an RJ-45 cable to the LAN.

Using DHCP (dynamic host configuration protocol), the R&S SMCV100B assigns the IP address automatically.

If connected to the LAN, the R&S SMCV100B displays the IP address at the left bottom of the block diagram.

If disconnected from the LAN, the R&S SMCV100B displays IP address *0.0.0.0*.

See also the chapter "Connecting the instrument to the network (LAN)" in the user manual.

4.8 Connecting a monitor

This section describes how to connect a monitor for direct operation of the R&S SMCV100B. You can skip the following procedure, if you only operate the R&S SMCV100B remotely.

1. Connect the monitor to the "Display Port" socket of the R&S SMCV100B on the rear panel.
   The "Display Port" socket does not support dual-mode Display Port (DP++). Use an active adapter if you connect to HDMI cables, for example.
2. At the monitor, connect the cable to one of the following sockets:
   - Display Port: Connect it to the Display Port socket of the monitor.

- HDMI: You need an active adapter Display Port to HDMI. Passive adapters do not work.
- VGA: You need an active adapter, Display Port to VGA. Passive adapters do not work.

If the monitor provides touch functionality, an additional connection can be required, for example, a USB connection. Refer to the documentation of your monitor.

4.9 Connecting USB devices

You can connect or disconnect all USB devices from the R&S SMCV100B during operation.

To connect USB storage devices

USB storage devices, such as memory sticks, allow data transfer from or to the R&S SMCV100B. You can also use them for firmware updates.

► Connect the USB storage device to a USB type A connector on the front panel.
Connect the device directly, without connecting cable. Connecting cables can cause electromagnetic radiation and impair a measurement result.

To connect USB devices with external power supply

1. **NOTICE!** Connected devices with external power supply can feed back current into the 5 V power supply of the USB interface and thus damage the R&S SMCV100B.

   Ensure that there is no connection between the positive pole of the power supply and the +5 V power pin of the USB interface (VBUS).

2. Connect the USB storage device to any of the USB connectors on the front panel or rear panel.

To connect a keyboard

► Connect the keyboard to any of the USB connectors on the front panel or rear panel.

When connected, the R&S SMCV100B detects the keyboard automatically. A detected keyboard has the default layout English – US.

To connect a mouse

► Connect the mouse to any of the USB connectors.

When connected, the R&S SMCV100B detects the mouse automatically.

To connect power sensors

You can connect power sensors of the R&S NRP families to any of the USB connectors on the front panel or rear panel.

See chapter "Using Power Sensors" in the user manual.

4.10 Connecting to RF coaxial connectors

Here, you find information on how to prepare and to connect to RF coaxial connectors of the R&S SMCV100B. Use these RF connectors, for example, for output of the RF signal or for input of an external reference signal.

To prepare for connecting

1. **NOTICE!** Damaged or not clean connections can lead to RF insertion loss and mismatch, and even premature wear of the connectors.

   Before connecting to the port, inspect the RF connector visually. Check that it is clean, undamaged and mechanically compatible.

2. **NOTICE!** Excessive DC voltage at the RF input connector can damage the instrument. Make sure the values are within the DC limits given in the data sheet.

   Make sure that signal power and DC limits as given in the data sheet.

3. Use a high-quality RF cable that matches the RF connector type.
   See "Cable selection and electromagnetic interference (EMI)" on page 19.

4. You can connect to two kinds of connectors:

   - "To connect to screwable connectors" on page 24
   - "To connect to pluggable connectors" on page 24

To connect to screwable connectors

The R&S SMCV100B provides screwable RF connectors as in Table 4-1.

► **NOTICE!** Excessive tightening can damage the connectors.

To connect the cable with the connector, proceed as follows:

a) Carefully align the connector of the cable and the connector along a common axis.
b) Mate the connectors along the common axis until the male pin of the inner connector engages with the female socket of the outer connector.
c) Turn the nut of the outer connector until the connectors are firmly coupled.
d) Using a calibrated torque wrench torque the nut to the limit as in the table below. Hold the opposite connector part stationary with a spanner.

Table 4-1: Connector name, type, size, torque limit and nut opening

Connector		**Torque limit**		**Nut opening**	
Type	Name	lb-Inch	Nm	Inch	mm
N	RF 50 Ω	13.3	1.5	3/4	20

To connect to pluggable connectors

The R&S SMCV100B provides pluggable Bayonet Neill-Concelman (BNC) connectors.

► To connect the RF cable with the BNC connector, proceed as follows:

a) Carefully align the connector of the cable and the BNC connector along a common axis.
b) Mate the connectors along the common axis until the male pin of the connector of the cable engages with the female socket of the BNC connector.

For information on how to handle and maintain the RF port, to minimize measurement deviations and ensure its longevity, see application note 1MA99.

If you want to mount test port adapters to your RF connector, see application note 1MA100.

4.11 Connecting to RF 50 Ω

To connect to "RF 50 Ω"

1. Before connecting to the "RF 50 Ω" connector on the front panel, proceed as follows:
   a) Prepare the "RF 50 Ω" connector. See "To prepare for connecting" on page 23.
   b) If activated, deactivate the RF output. In the block diagram, select the block "RF" > "RF Level" > "RF On > Off".
2. Connect to the "RF 50 Ω" connector. See "To connect to screwable connectors" on page 24.

To prevent RF output switch-off

► **NOTICE!** If you set a too high output level without a load connected to the instrument, the reverse power can exceed a limit forcing the R&S SMCV100B to switch off the RF output.

Connect a load with sufficient return loss as given in the data sheet.

4.12 Connecting to Ref In/Ref Out

To connect to "Ref In"/"Ref Out"

For connection, the R&S SMCV100B provides BNC connectors (reference signal frequency f_{ref} < 1 GHz) or SMA connectors (f_{ref} = 1 GHz).

1. Before connecting, prepare the Ref In/Ref Out connectors on the rear panel. See "To prepare for connecting" on page 23.
2. Connect to the "Ref In"/"Ref Out" connectors:
   - f_{ref} < 1 GHz: "To connect to pluggable connectors" on page 24
   - f_{ref} = 1 GHz: "To connect to screwable connectors" on page 24

4.13 Connecting to Dig. IQ HS x

The Dig. IQ HS x connector comprises a QSFP+ (Quad Small Form-factor Pluggable) socket that has two components: a QSFP+ cage and a QSFP+ connector. The QSFP+ cable is equipped with the QSFP+ plug.

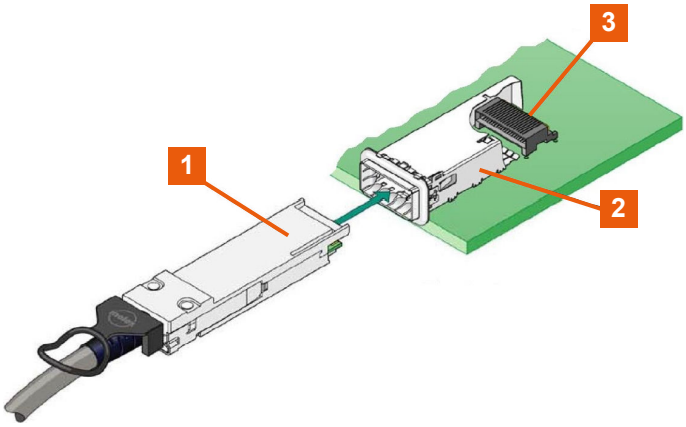

1 = QSFP+ plug
2 = QSFP+ cage
3 = QSFP+ connector

To connect to Dig. IQ HS x interface

1. For connection, use the QSFP+ cable R&S DIGIQ-HS.
   See "Cable selection and electromagnetic interference (EMI)" on page 19.
2. Hold the QSFP+ plug of the cable by its panes.
3. Turn the QSFP+ cable, so that the release tab shows upwards.
4. Insert and push the QSFP+ plug into the QSFP+ cage.

To disconnect from Dig. IQ HS x interface

1. **NOTICE!** If you pull the cable, you can damage the cable and the Dig. IQ HS x connector.

   Pull the release tab.
2. Pull the QSFP+ plug out of the QSFP+ cage.

See also chapters "Digital Baseband Input Settings" and "I/Q Digital Output Settings" in the user manual.

4.14 Connecting to IP Data

The IP Data connector comprises an SFP+ (Small Form-factor Pluggable) socket that has two components an SFP+ cage and an SFP+ connector.

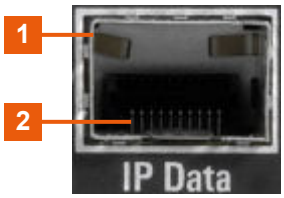

1 = SFP+ cage
2 = SFP+ connector

To connect to IP Data interface

1. For connection, use an SFP+ to RJ-45 adapter and an RJ-45 cable.
   See "Cable selection and electromagnetic interference (EMI)" on page 19.

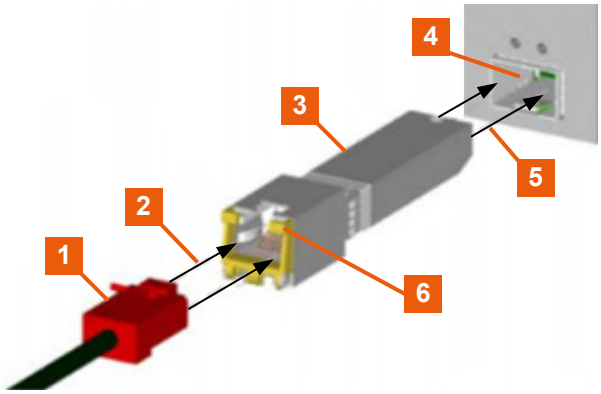

Figure 4-1: Connecting to the IP Data interface

1 = RJ-45 cable and plug
2 = Axis of connection
3 = SFP+ to RJ-45 adapter
3a = Bracket for mounting and releasing the adapter
4 = SFP+ socket of the IP Data connector

2. Connect the SFP+ to RJ-45 adapter to the SFP+ socket of the IP Data connector on the rear panel (Connecting to the IP Data interface).
   a) Turn the adapter, so that the release bracket joints show upwards.
   b) At the RJ-45 socket of the adapter, open the release bracket, so that the bracket shows upward.
   c) Insert and push the adapter into the cage of the SFP+ socket of the IP Data connector.

d) To mount the adapter, push the release bracket down to close the bracket. The adapter is connected to the IP Data connector.

3. Plug the RJ-45 cable into the RJ-45 socket of the adapter.

To disconnect from IP Data interface

1. Unplug the RJ-45 cable.
2. Open the release bracket.
3. Carefully pull the SFP+ to RJ-45 adapter out of the SFP+ socket of the IP Data interface.

Use the IP Data interface as input of external coding IP data for broadcast baseband signals.

See also chapter "Local IP Data Network Settings" in the corresponding broadcast standard user manuals.

4.15 Switching on or off

The following table provides an overview of power states, LEDs and positions of the power switch.

Table 4-2: Overview of power states

State	LED	Position of power switch
Off	gray	[0]
Standby	orange	[I]
Ready	green	[I]

To switch on the R&S SMCV100B

The R&S SMCV100B is off but connected to power. See Chapter 4.6, "Connecting to power", on page 20.

1. Set the switch on the power supply to position [I] on the rear panel.

   The LED of the [On/Standby] key on the front panel is orange.

2. Wait until the oven-controlled oscillator (OCXO) warms up. For the warm-up time, see data sheet.

3. Press the [On/Standby] key on the front panel.

   The LED changes to green. The R&S SMCV100B boots.

   After booting, the R&S SMCV100B starts up displaying the block diagram on the screen on the front panel.

To check start-up functions

When starting for the first time, the R&S SMCV100B starts with the default settings. When restarting, the R&S SMCV100B recalls the instrument configuration before shut-down.

See the chapter "Saving and Recalling Instrument Settings" in the user manual.

When switched on, the R&S SMW automatically monitors main functions. You can query erroneous functions. In addition to automatic monitoring, you can perform maintenance tasks. See the following:

- Chapter "Querying Error Messages" in the user manual.
- Chapter "Performing Maintenance Tasks" in the user manual.

To handle surges

Surges at the AC power connector can force a restart of the R&S SMCV100B. The R&S SMCV100B restarts with the instrument configuration of the last start-up and looses intermediate configurations. Save intermediate configurations, if needed. To avoid instrument restart, make sure that peak power levels are within the specified ranges in the data sheet.

To shut down the product

The product is in the ready state.

► Press the [On/Standby] key.

  The operating system shuts down. The LED changes to orange.

In the standby state, the power switch circuits and the OCXO are active. To deactivate them, disconnect the instrument from the power supply.

To disconnect from power

The R&S SMCV100B is in the standby state.

1. **NOTICE!** Risk of data loss. If you disconnect the product from power when it is in the ready state, you can lose settings and data. Shut it down first.

Set the toggle switch on the power supply to position [0].
The LED of the [On/Standby] key is switched off.

2. Disconnect the R&S SMCV100B from the power source.

5 Instrument tour

This chapter explains the control elements and the connectors of the R&S SMCV100B. The views of the front panel and the rear panel help you to get familiar with the instrument and to perform first steps. For specifications of the interfaces, see the data sheet.

The meanings of the labels on the R&S SMCV100B are described in Chapter 1.2, "Labels on R&S SMCV100B", on page 10.

5.1 Front panel tour

This section provides an overview of the control elements and connectors of the front panel of the R&S SMCV100B. On the rear panel, you find all further connectors of the unit.

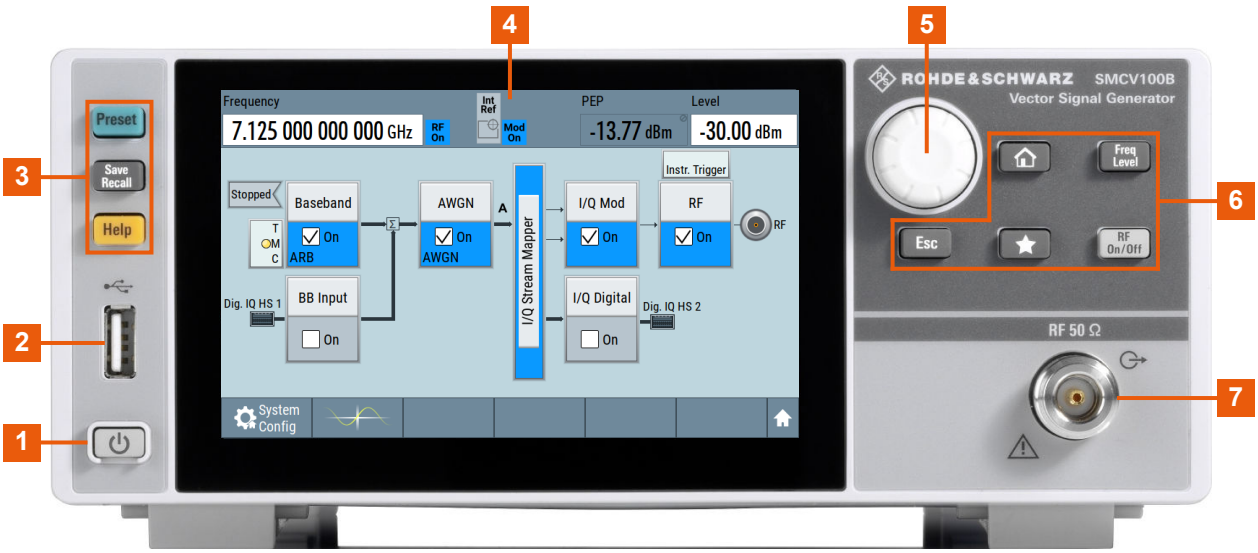

Figure 5-1: Front panel view

1 = On/Standby, page 33
2 = USB, page 35
3 = Utility keys
4 = Touchscreen
5 = Rotary knob
6 = Function keys and Editing keys, page 34
7 = Connectors

5.1.1 Touchscreen

The block diagram and the most important settings are displayed on the screen on the front panel. Also, the screen display provides status and setting information and allows you to quickly reconfigure the signal flow. The screen is touch-sensitive, offering an alternative means of user interaction for quick and easy handling of the instrument.

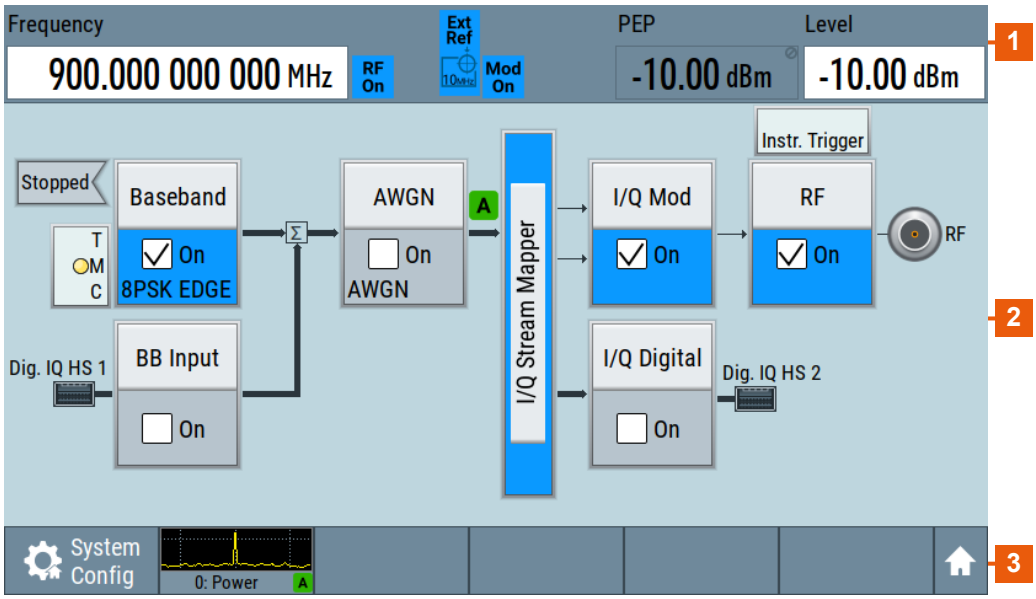

Figure 5-2: Touchscreen elements

1 = Status bar (frequency and level display)
2 = Block diagram
3 = Taskbar/softkey bar

Any user interface elements that react to a click by a mouse pointer also react to a tap on the screen, and vice versa. Using the touchscreen, you can perform the following tasks (among others) by the tap of your finger:

- Changing a setting
- Selecting new settings
- Scrolling through a list or a table of parameters
- Saving or recalling settings
- Opening and closing dialogs

See also:

- Chapter 8.2, "Means of manual interaction", on page 67, for operating the touchscreen.

- "Maintenance" in the user manual, for instructions on cleaning the screen.

5.1.2 Keys

5.1.2.1 On/Standby

The [On/Standby] key switches the instrument from the standby to the ready state or vice versa.

The LED below the [On/Standby] key indicates the instrument state, see Chapter 4.15, "Switching on or off", on page 28.

5.1.2.2 Utility keys

The utility keys cause the R&S SMCV100B to return to a defined instrument state and provide information on the instrument and assistance.

For more information, refer to chapter "General Instrument Functions" in the user manual.

Table 5-1: Utility keys

Utility key	Assigned functions
[Preset]	Sets the instrument to a defined state
[Save/Rcl]	Saves and loads instrument setting Accesses the file manager
[Help]	Displays context-sensitive help text

5.1.2.3 Function keys

Function keys provide access to most common generator settings and functions.

A detailed description of the corresponding functions is provided in the user manual.

Table 5-2: Function keys

Function key	Assigned functions
[Home]	Brings the block diagram to the foreground. Active dialogs are minimized.
[Freq/Level]	Pressing once: Activates frequency entry. Pressing twice: Activates level entry. Toggles between frequency and level entry.
[★ (User)]	Key with a customizable function.
[RF on/off]	Switches the RF output on and off. Press the key again to restore the last active status. Status is displayed in the "Status bar".

5.1.2.4 Editing keys

Editing keys enable you to confirm an entry, delete individual characters, or exit the current operation.

Table 5-3: Editing keys

Type of key	Description
[Esc] key	Closes all kinds of dialog boxes, if the edit mode is not active. Quits the edit mode, if the edit mode is active. In dialog boxes that contain a "Cancel" button it activates that button. For "Edit" dialog boxes the following mechanism is used: • If data entry has been started, it retains the original value and closes the dialog box. • If data entry has not been started or has been completed, it closes the dialog box.

5.1.2.5 Navigation controls

The navigation controls include a rotary knob, navigation keys, and the display keys. They allow you to navigate within the display or within dialog boxes.

Rotary knob

The rotary knob has several functions:

- Increments (clockwise direction) or decrements (counterclockwise direction) numeric instrument parameters at a defined step width.
- Moves the selection, e.g. to a function block in the block diagram.
- Shifts the selection bar within focused areas (e.g. lists).

- Activates editing of entries or confirms and terminates entries.
- Opens a context-sensitive menu, when it is pressed and held.

5.1.3 Connectors

The RF 50 Ω connector and USB connector are on the front panel.

USB
Female USB (universal serial bus) 2.0 connector of type A (host USB). You can connect, for example, a keyboard, a mouse or a USB memory stick.

Further USB connectors of type A are available on the rear panel.

How to: Chapter 4.9, "Connecting USB devices", on page 22.

RF 50 Ω
N-type female connector for output of the RF signal.

How to: Chapter 4.11, "Connecting to RF 50 Ω", on page 25

5.2 Rear panel tour

This section provides an overview of the connectors on the rear panel of the instrument. For technical data of the connectors, refer to the data sheet.

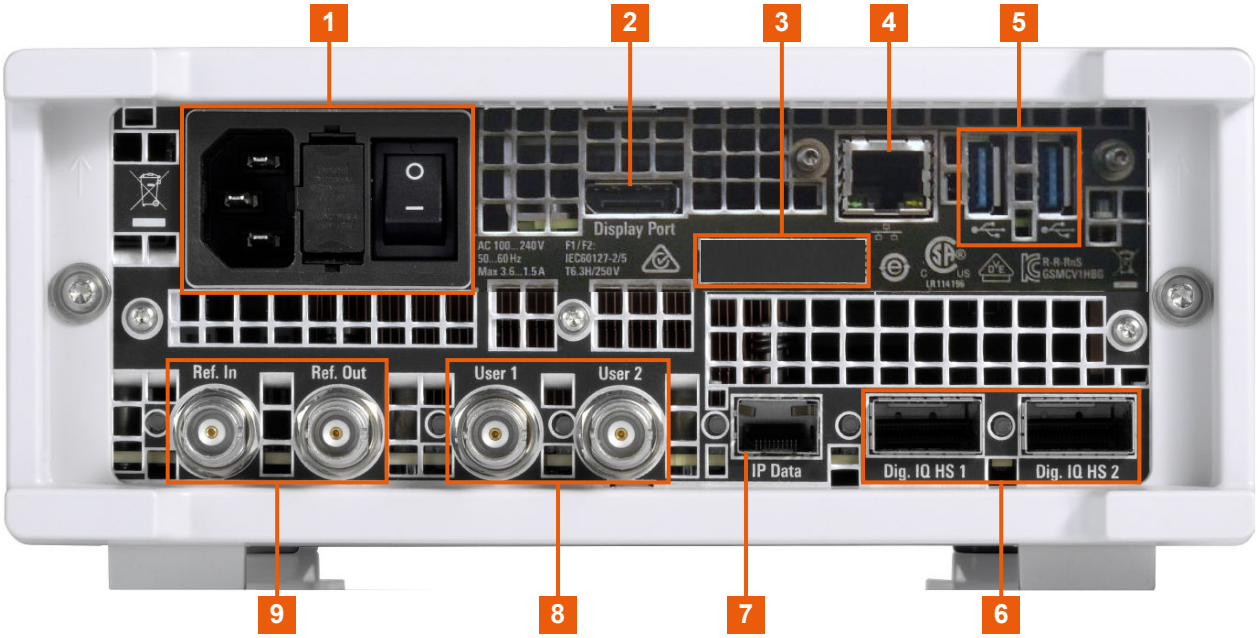

Figure 5-3: Rear panel

1 = AC power supply connector and switch
2 = Display Port
3 = Serial number (six digits in the string 1432.7000.02-<serial number>-<checksum>)
4 = LAN
5 = USB
6 = Dig. IQ HS x
7 = IP Data
8 = User x
9 = Ref In/Ref Out

5.2.1 Connectors

AC power supply connector and switch

Mains power switch for performing the following tasks:

- Connecting the internal power supply to the power source
- Disconnecting the internal power supply from the power source

How to: Chapter 4.6, "Connecting to power", on page 20.

Display Port

Display Port monitor connector.

How to: Chapter 4.8, "Connecting a monitor", on page 21

LAN
RJ-45 connector to connect the R&S SMCV100B to a LAN for remote control, remote operation, and data transfer.

How to: Chapter 4.7, "Connecting to LAN", on page 20

USB
Two female USB (universal serial bus) 3.0 connectors of type A (host USB). They have the same functionality as the USB connectors on the front panel, but provide higher data rates. See "USB" on page 35.

How to: Chapter 4.9, "Connecting USB devices", on page 22.

Dig. IQ HS x
Connectors for the input/output of high-speed digital I/Q signals, for example, from and to Rohde & Schwarz instruments.

Table 5-4 lists the interface designation (input/output) and the required option.

For more information, see data sheet.

Table 5-4: Overview of Dig. IQ HS x interfaces and required options

Interface	Designation	Required option
Dig. IQ HS 1	"BB Input"	R&S SMCVB-K19 digital baseband interface
Dig. IQ HS 2	"I/Q Digital Out"	

The interface is a QSFP+ (Quad Small Form-factor Pluggable) module. It supports max. bandwidth of up to 50 Gsample/s with optical active cables.

How to: Chapter 4.13, "Connecting to Dig. IQ HS x", on page 26

IP Data
Interface for input of IP data for real-time encoding in broadcast baseband signals.

The interface comprises a SFP+ (Small Form-factor Pluggable) socket.

How to: Chapter 4.14, "Connecting to IP Data", on page 27

User x
BNC multipurpose connectors for defining input signals and output signals.

Table 5-5 lists the signals assigned to the User x connectors in the default instrument state.

Table 5-5: Default configuration of the User x connectors

User connector	Direction	Default assigned signal
1	Output	Baseband Marker 1
2	Input	Global Clock

A dedicated LED indicates the connector status:

- green: an input connector
- yellow: an output connector
- red: error
- no light / gray: the connector is not active
- blinking LED: connection indication as a result of the "Identify Connector" function

See also chapter "Global connector settings" in the user manual.

Ref In/Ref Out

Input/output for external reference signal.

BNC connectors for reference signals from 1 MHz to 100 MHz.

How to: Chapter 4.12, "Connecting to Ref In/Ref Out", on page 25

6 Trying out the instrument

This chapter introduces the most important functions and settings of the R&S SMCV100B step by step.

The complete description of the functionality and its usage is given in the R&S SMCV100B user manual. Basic instrument operation is described in Chapter 8, "Instrument control", on page 66.

Prerequisites

- R&S SMCV100B equipped with its minimum configuration:
  - Base unit
  - Frequency option R&S SMCVB-B103
- The R&S SMCV100B is connected to the power supply, and started up as described in Chapter 4, "Preparing for use", on page 16.

For the first signal generation tasks, you use the internal baseband and reference signal, so you do not need any additional signal source. More complex signal generation tasks, however, require an instrument equipped with additional options and/or external signals. Each task description lists its prerequisites.

ⓘ The screenshots in this description show a fully equipped instrument. Consider that, the block diagram displayed on your particular instrument can differ from the one used in the example.

Touchscreen operation

For detailed information on touchscreen operation, see Chapter 8.2, "Means of manual interaction", on page 67.

The following sections provide introductory operation examples using the touchscreen.

- Generating an unmodulated carrier 40
- Generating a digitally modulated signal 42
- Triggering the instrument with an external signal 44
- Enabling and configuring a marker signal 50
- Verifying the generated signal with the graphics display 51
- Saving and recalling settings 55
- Generating a DAB signal 58

6.1 Generating an unmodulated carrier

We start out by generating a simple unmodulated signal. The R&S SMCV100B has a minimum configuration as in "Prerequisites" on page 39.

1. On the R&S SMCV100B front panel, press the Preset key to start out in a defined instrument configuration.
2. Set the frequency:
   a) On the "Status Bar", tap the "Frequency" field.
   b) On the on-screen keypad, enter *1.955* and press the "GHz" key.

   The on-screen keypad closes and the frequency value is displayed.

3. On the "Status Bar", tap the "Level" field and enter the level in the same way.

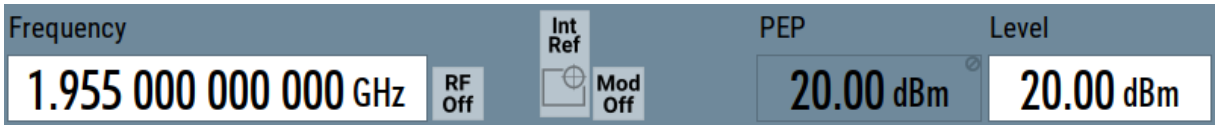

4. Select "Block Diagram > RF Block > On" to enable the output of the generated unmodulated signal.

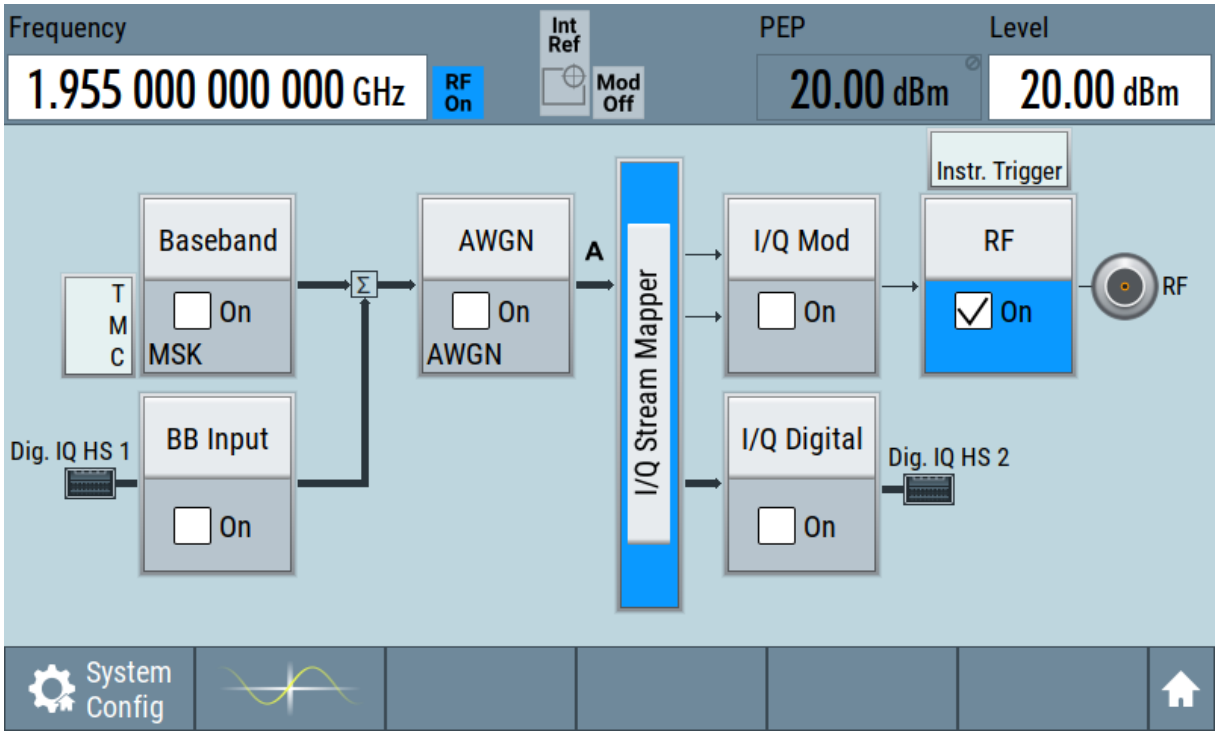

Figure 6-1: Block diagram: Generating an unmodulated signal

The 1.955 GHz signal is output at the RF 50 Ω connector at the front panel of the R&S SMCV100B.

Connect RF 50 Ω of the R&S SMCV100B to a signal analyzer, for example R&S®FSW, to display the generated signal.

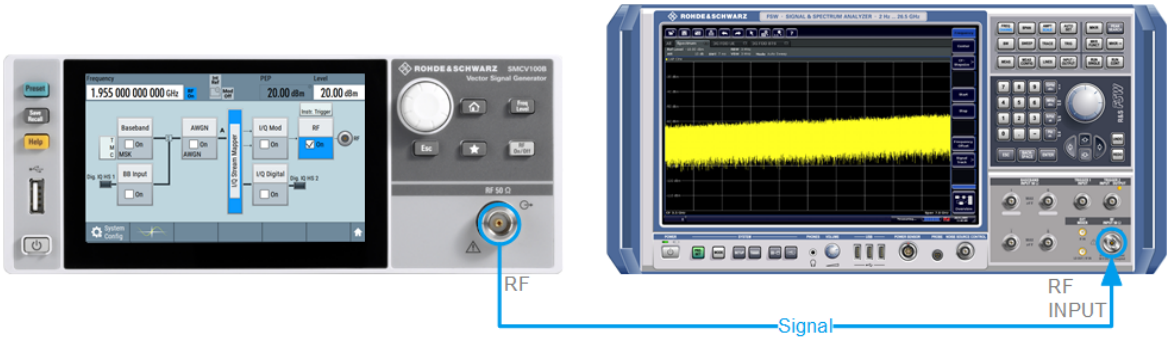

Figure 6-2: Simplified test setup

For the required settings of the signal analyzer, refer to its user manual or its online help.

6.2 Generating a digitally modulated signal

This example shows you how to generate a simple WCDMA-3GPP (QPSK 45° offset) signal with the help of the "Custom Digital Modulation" functionality.

Prerequisites

- Minimum configuration as in "Prerequisites" on page 39
- Option custom digital modulation R&S SMCVB-K199

The initial situation is not the instrument's preset state but rather the configuration described in Chapter 6.1, "Generating an unmodulated carrier", on page 40.

1. In the block diagram, select "Baseband" and navigate to the section "Misc > Custom Digital Mod...".

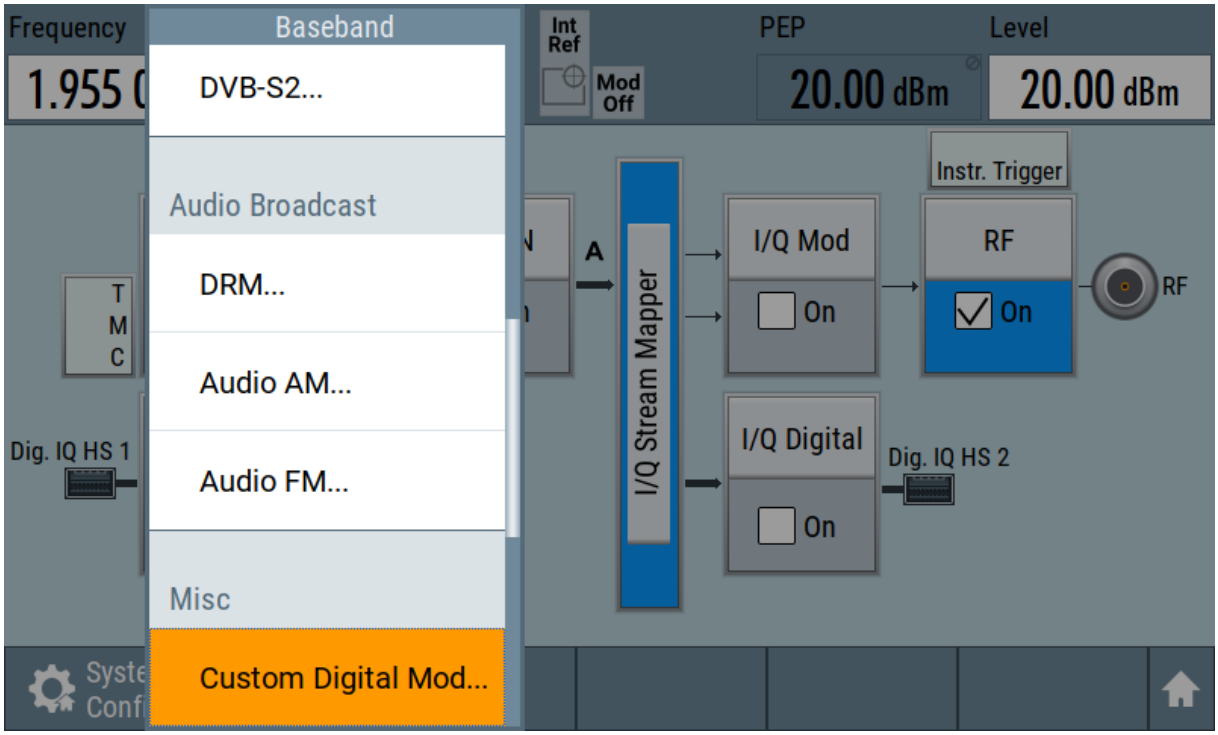

The "Custom Digital Modulation" dialog opens.

2. In the "Custom Digital Modulation" dialog, select "General > Set according to Standard > WCDMA-3GPP".

3. Select "General > State > On" to enable signal generation.

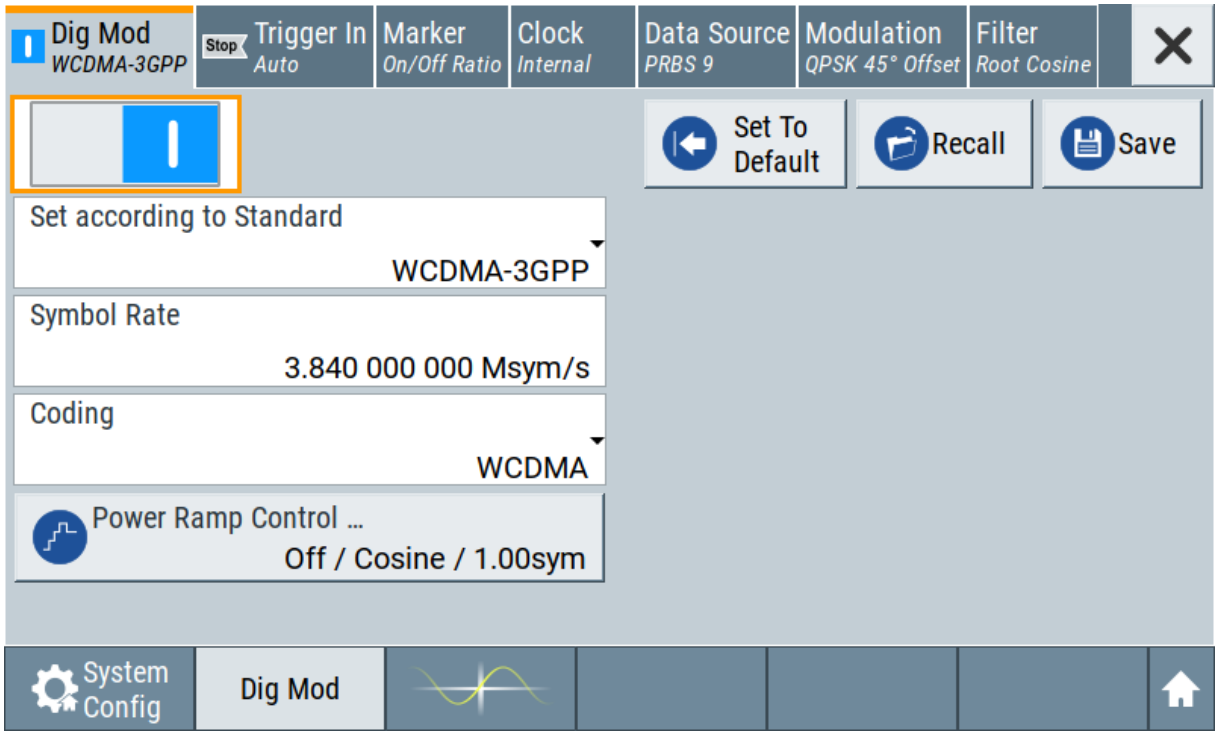

The instrument activates automatically "I/Q Mod", uses the internal trigger and clock signals, and generates a WCDMA-3GPP signal, modulated with a QPSK 45° offset modulation.

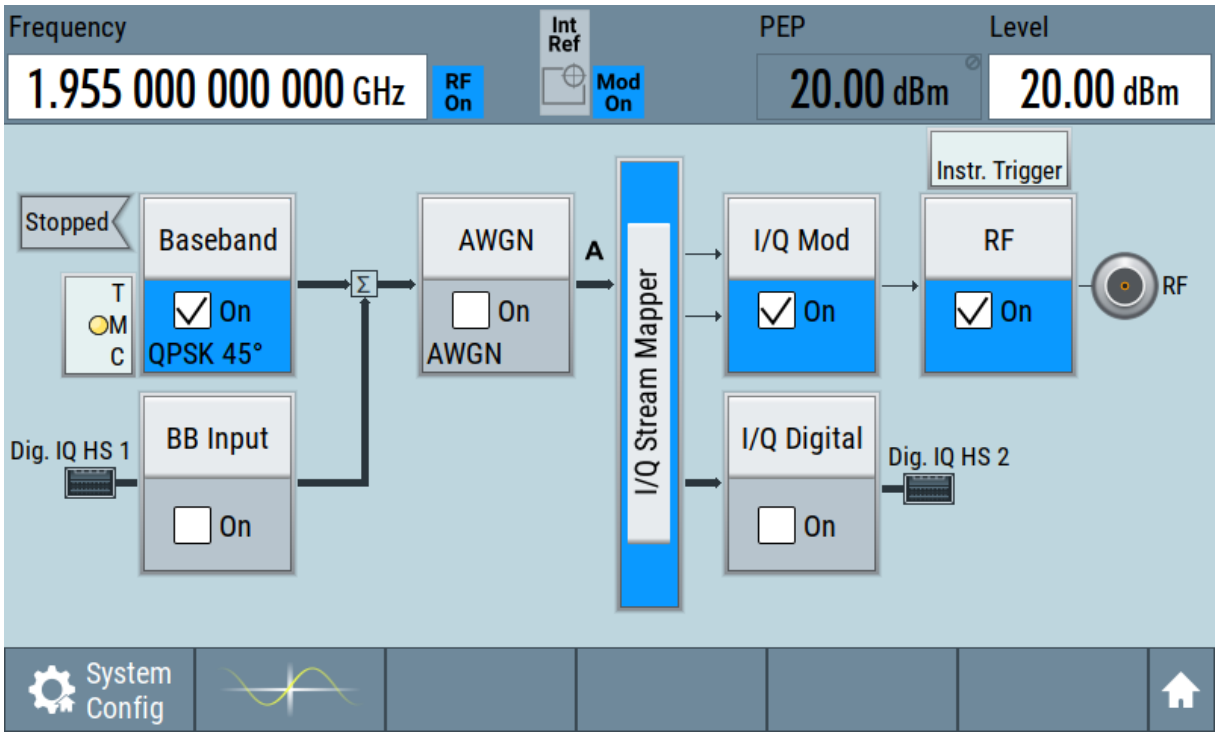

Figure 6-3: Block diagram: Generating a digitally modulated signal

4. Optionally, select the "Modulation" tab and observe the used "Modulation Type".

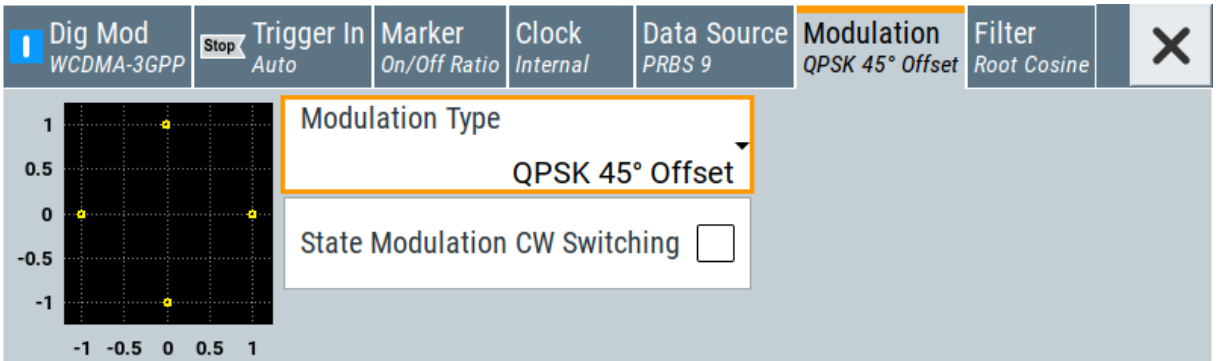

Figure 6-4: Display of the used modulation type

6.3 Triggering the instrument with an external signal

The following configurations are rather theoretical cases, because you rarely use the R&S SMCV100B as a standalone instrument. Usually, the instrument would be connected to a device under test (DUT) and/or other measurement equipment.

Prerequisites

- Minimum configuration as in "Prerequisites" on page 39
- Option custom digital modulation R&S SMCVB-K199

As a rule, whenever a test setup requires two or more devices, provide them with a common reference frequency. Some test setups require control of the signal generation start and an exact generation start time, determined by a defined trigger event. For example, by triggering the instrument internally or externally from the DUT.

The example below illustrates the general principle of external triggering and extends the configuration performed in Chapter 6.2, "Generating a digitally modulated signal", on page 42 by the configuration of the required trigger signal and connector settings.

This test setup requires one signal analyzer, like the R&S®FSW, as additional equipment.

To start signal generation synchronous to an external global trigger signal

The configuration requires three main steps with the following goals:

1. Observe the current connector configuration. Define an input connector for the external global trigger signal.
   See "To verify the current connector configuration" on page 45
2. Configure the baseband to use the external global trigger signal as trigger source.
   See "To reconfigure the trigger settings" on page 47
3. Connect the instrument and the external trigger source.
   See "To connect the instrument and the external trigger source" on page 48

To verify the current connector configuration

The R&S SMCV100B is equipped with multipurpose bi-directional User connectors. Because the signal direction, input or output, and the signal mapping are configurable, we recommend that you check the current configuration before cabling or further instrument's configurations.

1. To display an overview of the current mapping of the logical signals to the connectors, perform one of the following:
   - In the block diagram, select the Trigger/Marker/Clock status LEDs on the left side of the "Baseband" block.

     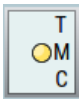

   - Select "Baseband > Trigger Marker Clock".

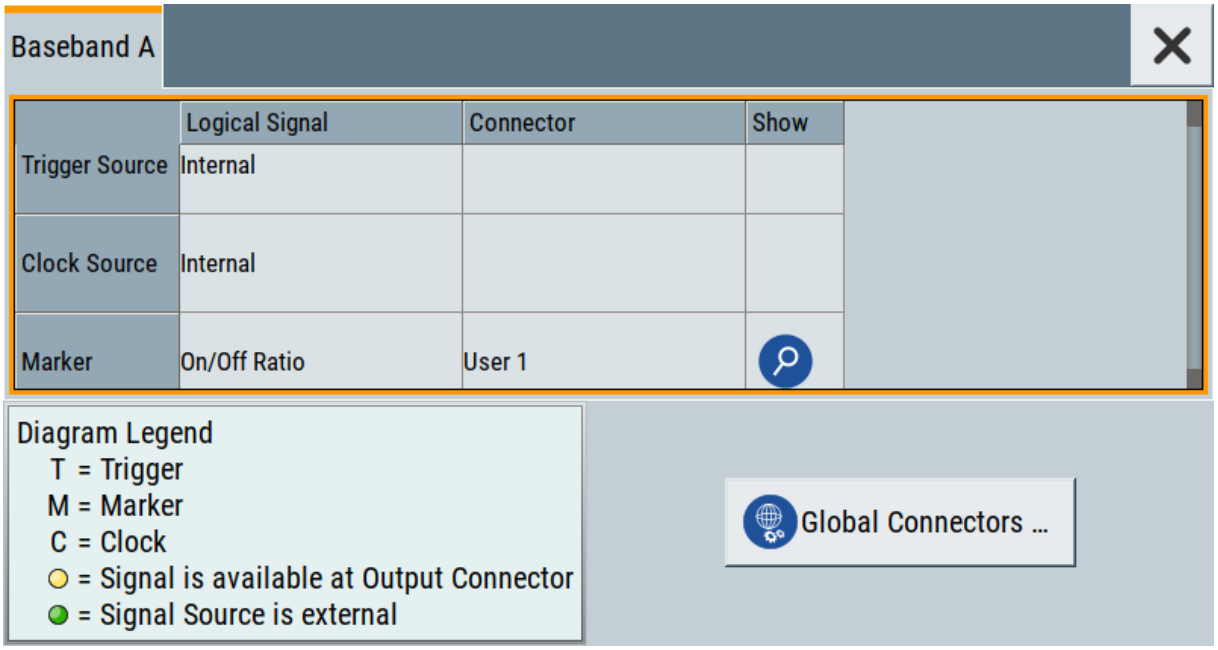

The instrument uses its internal trigger and clock signals, and the default mapping of the marker signals to the User connectors.

2. To access the related connector settings, perform one of the following:
   - Select "Global Connector Settings"
   - Tap the connector name, for example select the connector "User 1"

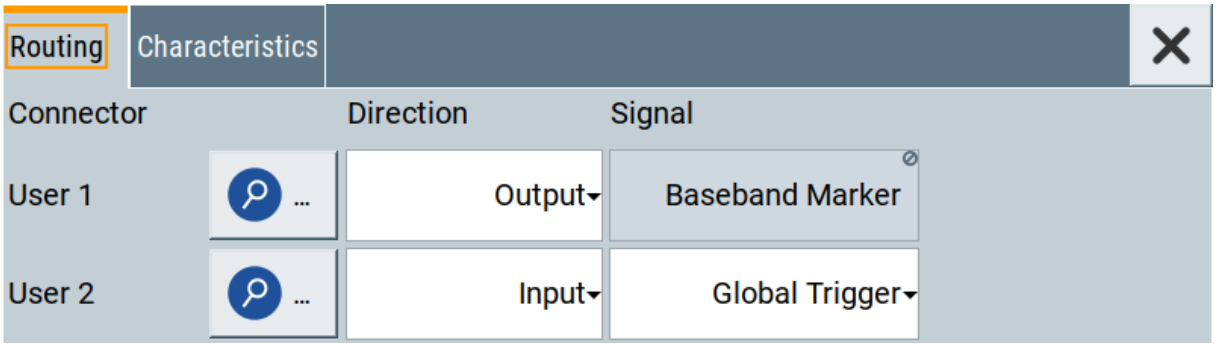

Figure 6-5: Signal mapping to the global connectors

The "Global Connectors" dialog displays the current connectors configuration. The settings are configurable, but in this example we use the default mapping.

3. Alternatively, select "Block Diagram > Baseband > Misc > Custom Digital Mod", select the "Trigger In" tab and select "Global Connector Settings".

   In the current mapping, the two global connectors User x on the rear panel are configured as follows:
   - "Baseband Marker" signal is output at the "User 1" connector.
     The LED next to the connector is ● orange.

- The "User 2" connector is an input for the "Global Trigger" signal.
  The LED next to the connector is ● green.

Find the physical location of each connector

Use the built-in "Trigger Marker Clock > Show " function to display the location of the selected connector. A blinking marker on the front/rear panel view also indicates the selected connector.

To reconfigure the trigger settings

We assume that the instrument is configured as described in Chapter 6.2, "Generating a digitally modulated signal", on page 42 and the default connector mapping is maintained (see Figure 6-5).

1. In the block diagram, select "Baseband > Misc > Custom Digital Mod > Trigger In".
2. Select the following settings:
   a) "Mode > Armed Auto"
   b) "Source > External Global Trigger".

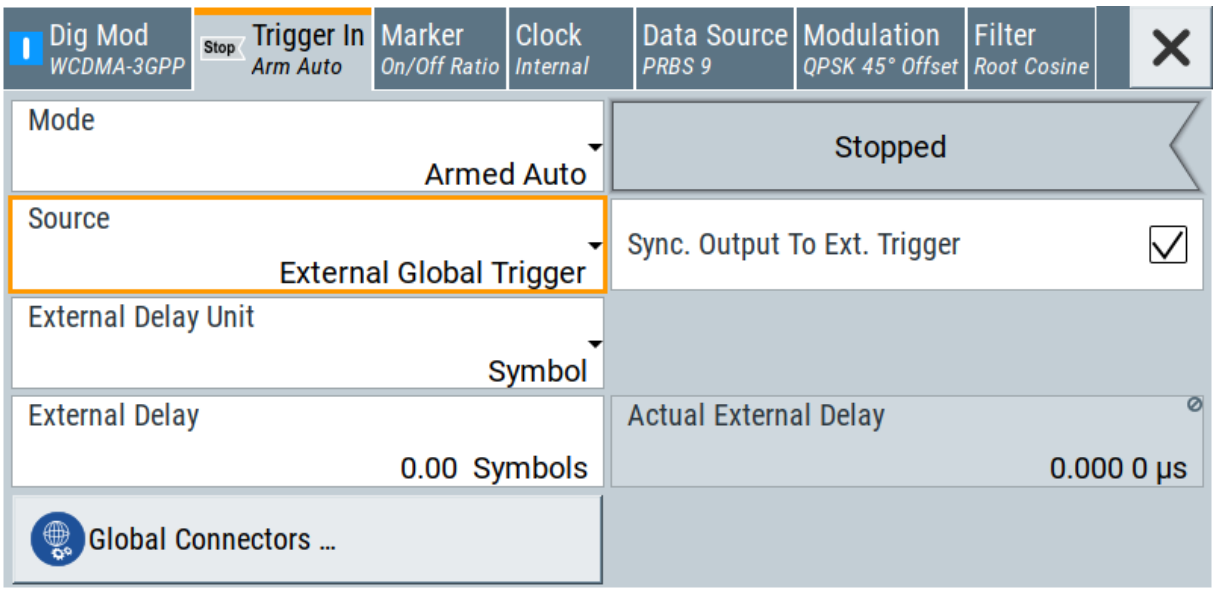

3. Select "Global Connector Settings > Routing".
4. For "User 2", select "Direction > Input" and "Signal > Global Trigger".

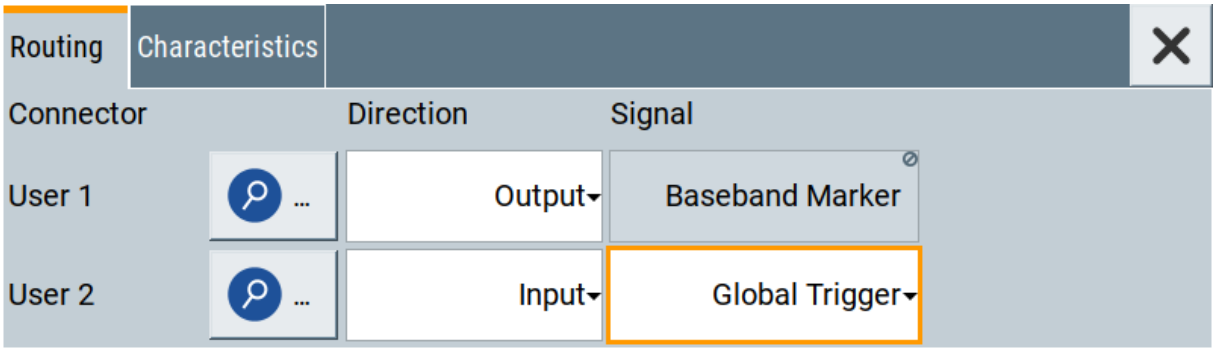

The instrument expects an external global trigger event. In the current configuration, the "Global Trigger" signal has to be supplied at the input connector User 2.
The Trigger/Marker/Clock status LEDs in the block diagram confirm that an external trigger signal is selected; the signal generation is however stopped.

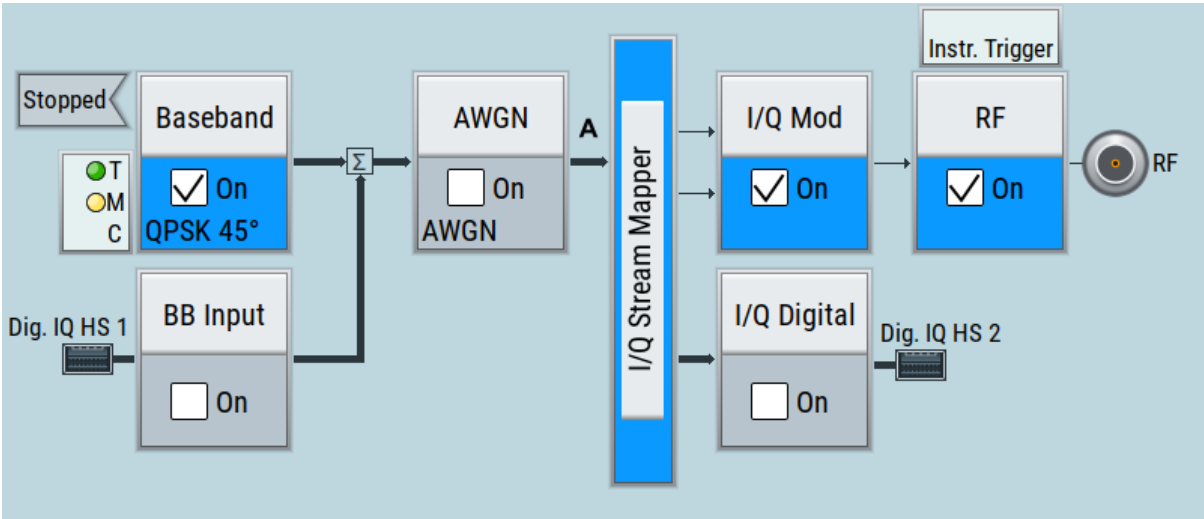

To connect the instrument and the external trigger source

1. Use a suitable cable to connect the external trigger source to the User 2 connector of the R&S SMCV100B. See Figure 6-6.

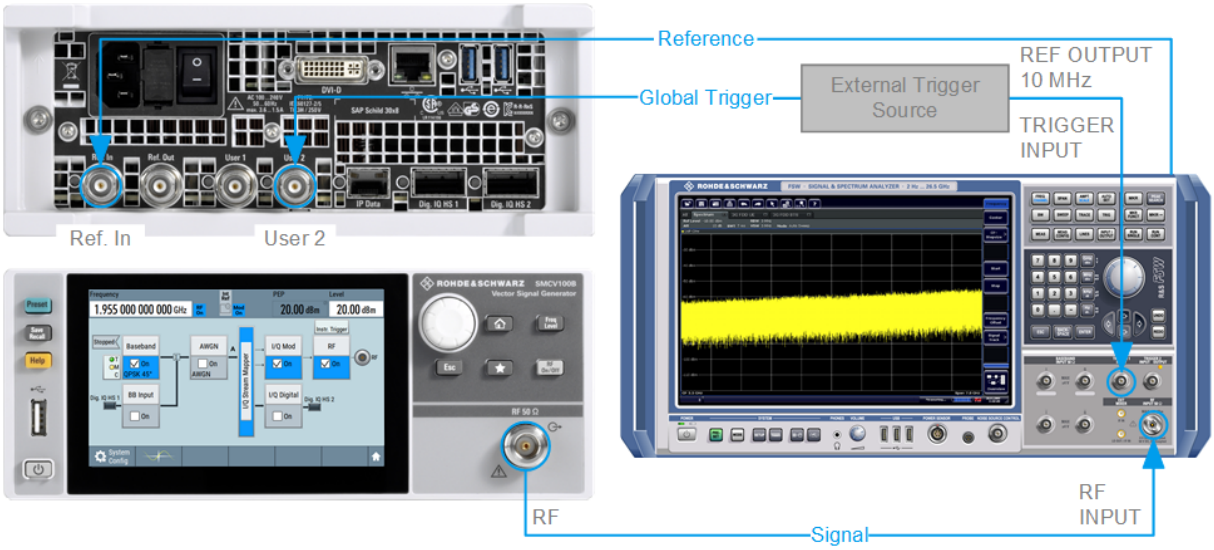

Figure 6-6: Simplified representation of a test setup*

** = The figure depicts the cabling as a general principle; particular test setups do not require all connections at the same time

The Figure 6-6 depicts the location of the connectors and explains the connection as principle. In practice, you would rather "substitute" the analyzer by a DUT, like a base station (BS).
Other than in the example, the DUT can be the source for the reference signal. Instead of using an external trigger source, the DUT can also send, for example, a frame trigger signal to the R&S SMCV100B. The R&S SMCV100B acts still as the signal source.

2. Use suitable cables to connect to RF 50 Ω and Ref. In connectors of the R&S SMCV100B to the signal analyzer or the DUT.
   The R&S®FSW supplies the 10 MHz external reference signal.

   Upon the receiving of an external trigger event, the R&S SMCV100B starts the signal generation and then generates a continuous signal. An "Arm" stops the signal generation. A subsequent trigger event causes a restart of the signal generation.

To learn more about this topic, refer to:

- Chapter "Baseband Trigger Signals" in the user manual
- Chapter "Global Connectors" in the user manual

6.4 Enabling and configuring a marker signal

Test setups often require synchronization of an external device with the generated data stream. For this purpose, the R&S SMCV100B can output maximum two marker signals (or markers) also to the generated signal.

The R&S SMCV100B provides four regular marker signals. You can output two of the marker signals, one to each of the "User 1"/"User 2" connectors.

With suitable marker settings for instance, you can mark slot or frame boundaries or mark the start of a particular modulation symbol.

Prerequisites

- Minimum configuration as in "Prerequisites" on page 39
- Option custom digital modulation R&S SMCVB-K199

This example extends further the configurations performed in Chapter 6.2, "Generating a digitally modulated signal", on page 42. We assume a default connector mapping (see Figure 6-5).

This test setup requires one oscilloscope, like the R&S®RTO, as additional equipment.

1. In the block diagram, select "Block Diagram > Baseband > Misc > Custom Digital Mod > Marker" tab.
2. Select "Marker Mode > Marker 1 > Pulse" and "Divider = 32".

   Generated is a periodic marker with marker frequency of 120 KHz. The signal is output at the User 1 connector of the R&S SMCV100B (see Figure 6-5).
3. Use a suitable cable to connect the User 1 connector of the R&S SMCV100B to the monitoring instrument, for example an oscilloscope like R&S®RTO. See Figure 6-7.

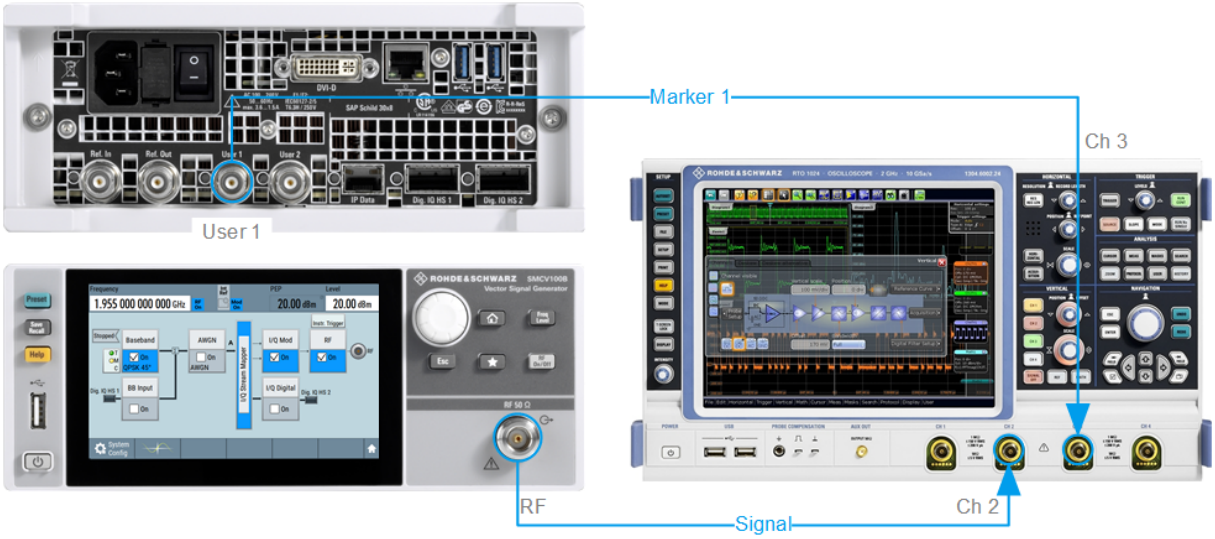

Figure 6-7: Simplified representation of a test setup for signal monitoring*

** = The figure depicts the cabling as a general principle

4. Use a suitable cable to connect the "RF 50 Ω" on page 35 connector of the R&S SMCV100B to the monitoring instrument.

To learn more about this topic, refer to chapter "Regular Marker Output Signals" in the user manual.

6.5 Verifying the generated signal with the graphics display

It is often useful to check the spectra of the configured signals, before you enable the RF output of the instrument. The R&S SMCV100B has a minimum configuration as in "Prerequisites" on page 39

The R&S SMCV100B provides a build-in function to represent the generated signal on a graphical signal display. We demonstrate this feature by showing the characteristics at one particular point of the signal processing chain. You can, however, display the signal characteristics at other different stages.

This example shows you how to use this graphical display to verify the generated signal. Use the signal generated in Chapter 6.4, "Enabling and configuring a marker signal", on page 50.

To access the graphical signal display functionality

► Perform one of the following:

- Select "Taskbar > System Configuration > Graphics".

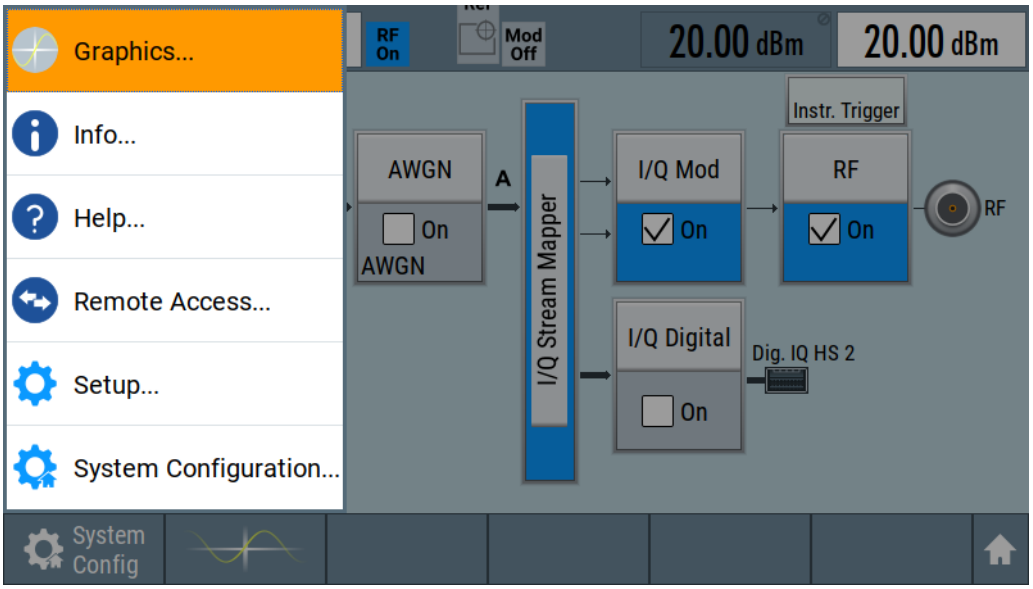

- On the "Taskbar", tap the wave icon.

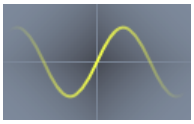

The "Graphics Configuration" dialog opens.

To visualize the signal

1. In the "Graphics Configuration" dialog, select "Mode > Constellation".
2. Select "Source > Baseband".
3. Select "Add" to enable signal display.

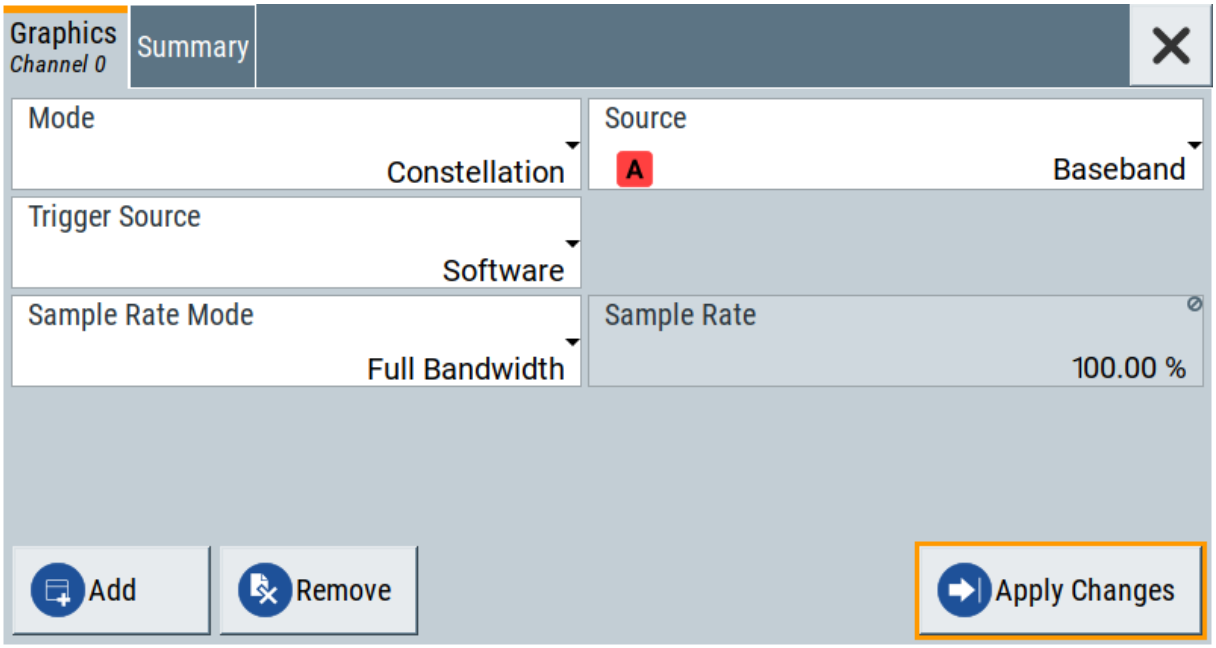

In the "Summary" tab, you can verify, that "Channel 0" graphic is visible in the table:

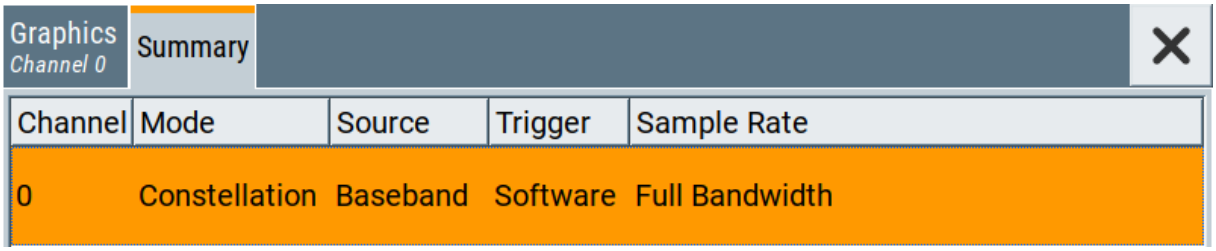

A new thumbnail (minimized view) indicating the active diagram appears in the "Taskbar".

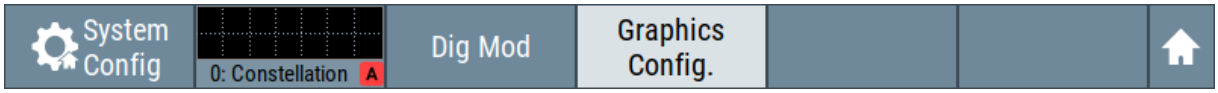

4. Press the thumbnail graphic.

   The graphic enlarges and the diagram is displayed in a normal size.

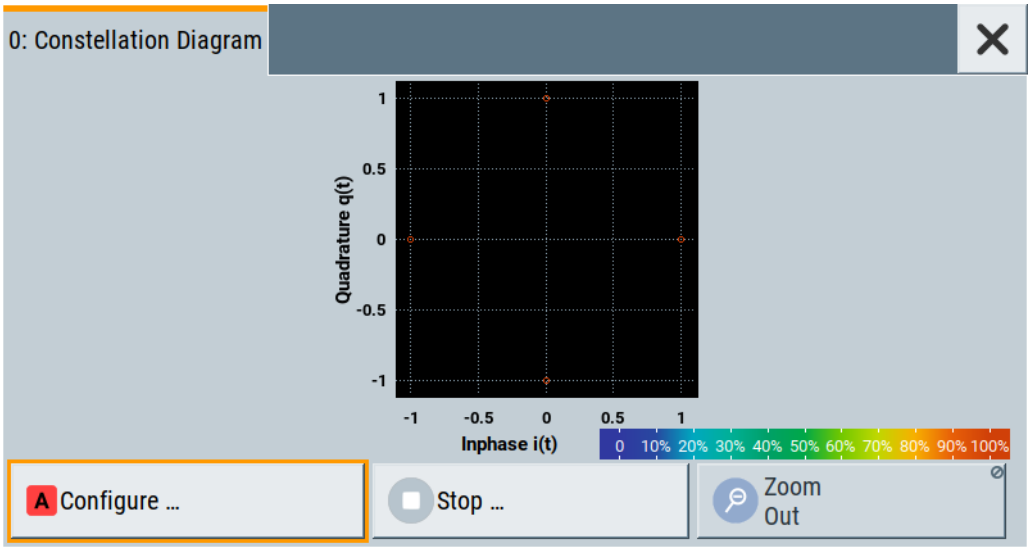

The "Constellation Diagram" displays the 3GPP FDD signal.

5. To retrieve more information, zoom in. In some diagrams you can select "Show Marker" to measure the distance, for example, between two signals. In principle, the zoom in function works like the two-finger pinching for magnifying images on your cellphone.

6. In the "Constellation Diagram" dialog, select "Configure" to return to the "Graphics Configuration" dialog.
   Close the "Graphics Configuration" dialog.

   This action has no effect on the configured graphics but on the dialog itself.

   The block diagram displays the current signal routing. It indicates that frequency and power offsets are enabled and displays the acquisition points for the real-time diagrams minimized in the "Taskbar".

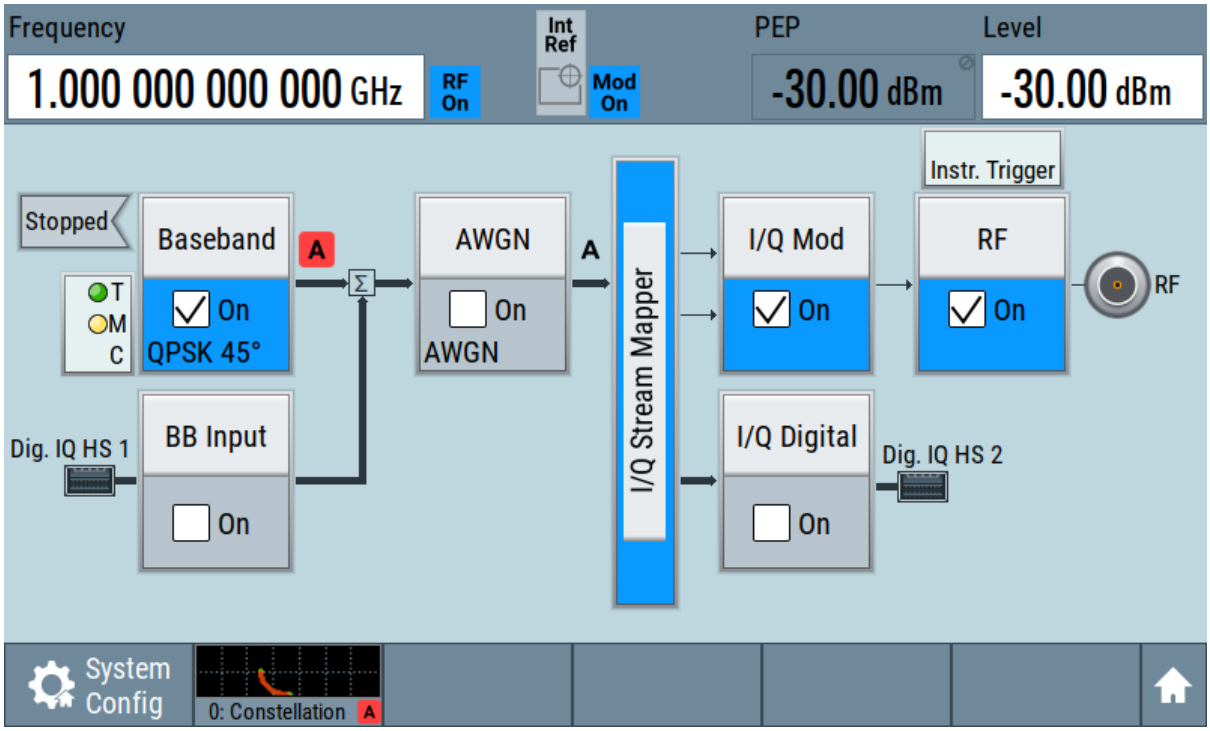

6.6 Saving and recalling settings

To restore the results of our measurements later, we save the instrument settings to a file.

To save the instrument settings to a file

We assume, a test configuration as described in Chapter 6.4, "Enabling and configuring a marker signal", on page 50.

1. Press the [Save/Rcl] key on the front panel.
2. In the "Save/Recall" dialog box, select "Operation Mode > Save".
   Tap the "Filename", use the on-screen keyboard, and enter *MyTestSignal*.

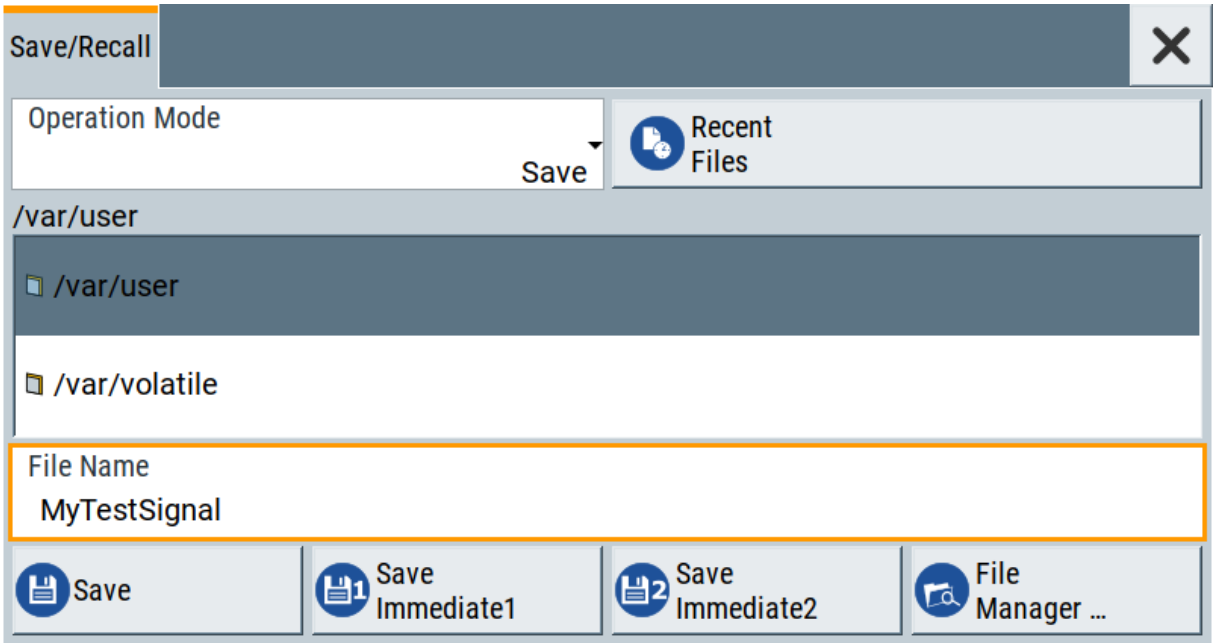

3. Tap the "Save" button.

   The file `MyTestSignal.savrcltxt` is saved in the default directory `/var/user`.

To load saved instrument settings

You can restore the settings to the instrument at any time using the settings file.

1. Press the Preset button to restore the default instrument settings.
2. Press the Save/Rcl key.
3. In the "Save/Recall" dialog, select "Recall" operation.
   Navigate to the directory of the saved file. Select the `MyTestSignal` file.

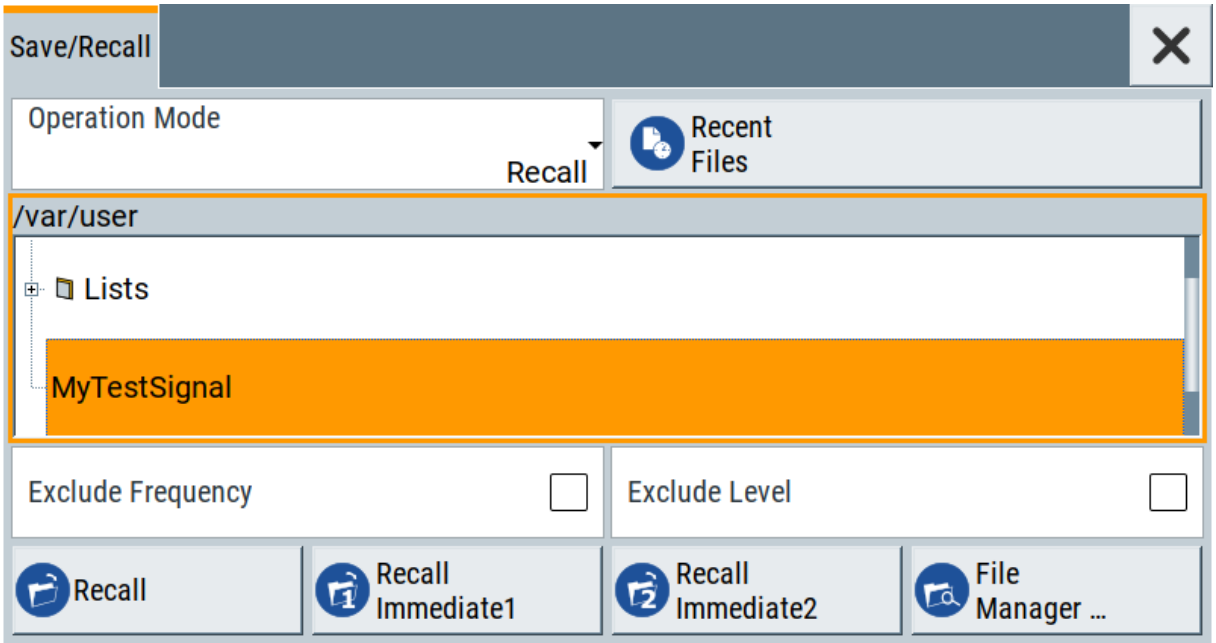

4. Tap the "Recall" button.

   All instrument settings are restored and the display resembles the instrument display right before the settings were saved.

To display all parameters with values different to their preset values

After loading saved instrument setting, visualize all parameters that have been changed from their default state.

1. In the block diagram, open the context-sensitive menu:
   a) Imitate a right-click.
   b) Tap and hold on an empty space in the block diagram for about one second.
2. In the context-sensitive menu, select "Mark All Parameters Changed from Preset".

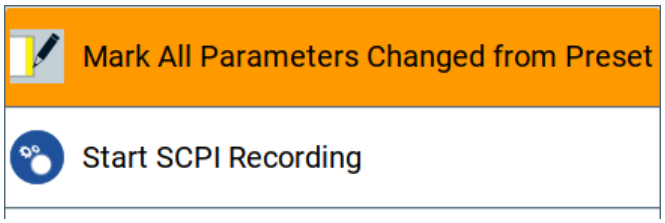

   All changed parameters are highlighted.

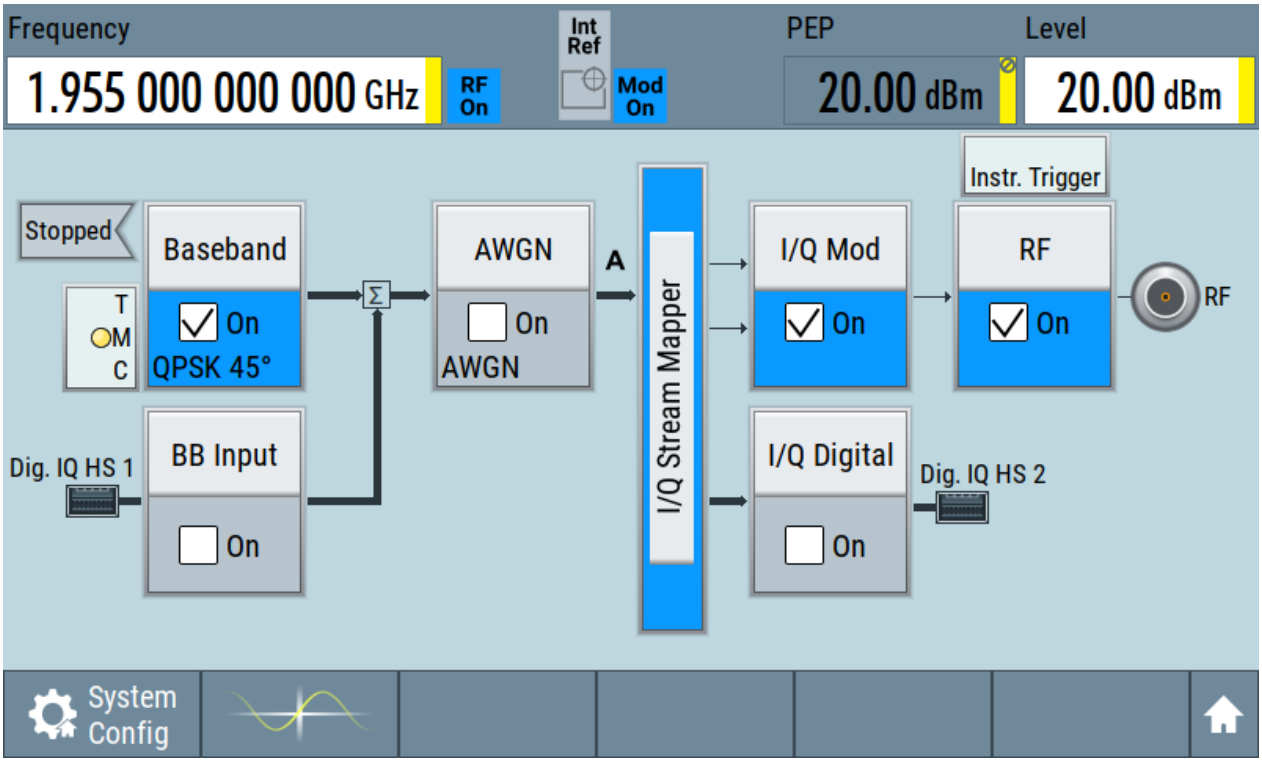

See also chapter "File and Data Management" in the user manual.

6.7 Generating a DAB signal

The main application field of the R&S SMCV100B is the generation of digital signals in accordance with broadcast standards, like DAB, DVB-T2 or ATSC3.0, to name a few. This example uses the digital broadcast standard DAB.

You can access and interact with the instrument and experience the advantages provided by the additional options.

Prerequisites

- Minimum configuration as in "Prerequisites" on page 39
- Option "Enable broadcast standard" R&S SMCVB-K519
- Option DAB/T-DMB R&S SMCVB-K156

To generate a DAB test signal

1. On the R&S SMCV100B front panel, press the Preset key to start out in a defined instrument configuration.

2. In the block diagram, select "Baseband > T-DMB/DAB".

   The "T-DMB/DAB" dialog appears and displays the general settings provided for the digital standard.

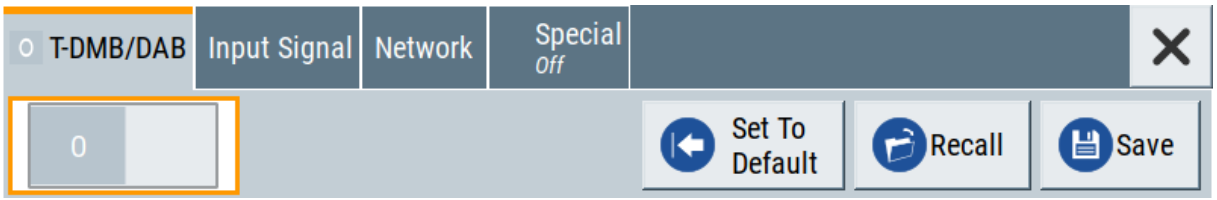

   As in the user interfaces of all broadcast standards, the "T-DMB/DAB" dialog is divided into several tabs. The "T-DMB/DAB" tab comprises the primary settings of the standard.
   Also, the functions for storing and recalling settings and provides access to further functions and dialogs. The more complex the digital standard itself is, the more comprehensive the further dialog and tab structure.

3. In the "Input Signal" tab, select "Source > Test Signal".
   The test signal is a signal with audio content.

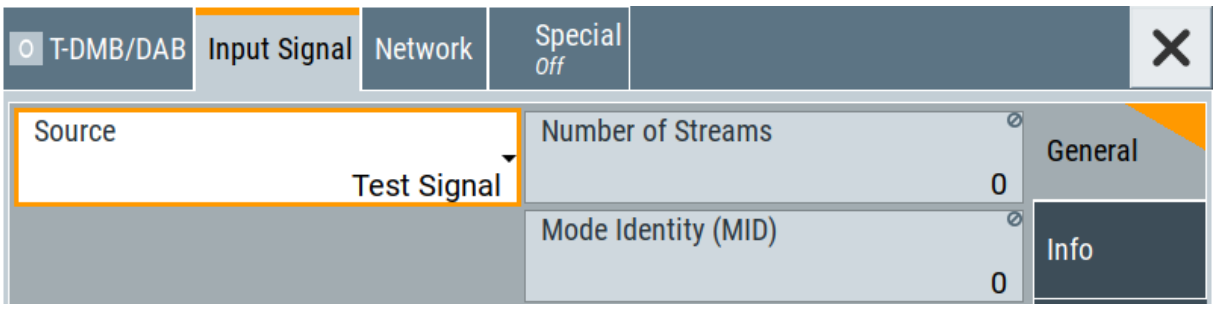

   Tip: On the front panel, press the Help key to retrieve detailed information on the current settings and on the contents of the predefined files.

4. In the "T-DMB/DAB" tab, select "State > On".

5. On the "Status Bar", set "Frequency" and "Level" of the DAB test signal:
   a) Tap the "Frequency" field, to enter the center frequency, for example *174.928 MHz*.
   b) Tap the "Level" field, to enter the RMS level, for example *20.00 dBm*.

6. On the "Status Bar", activate the RF output: Set "RF On > RF On".

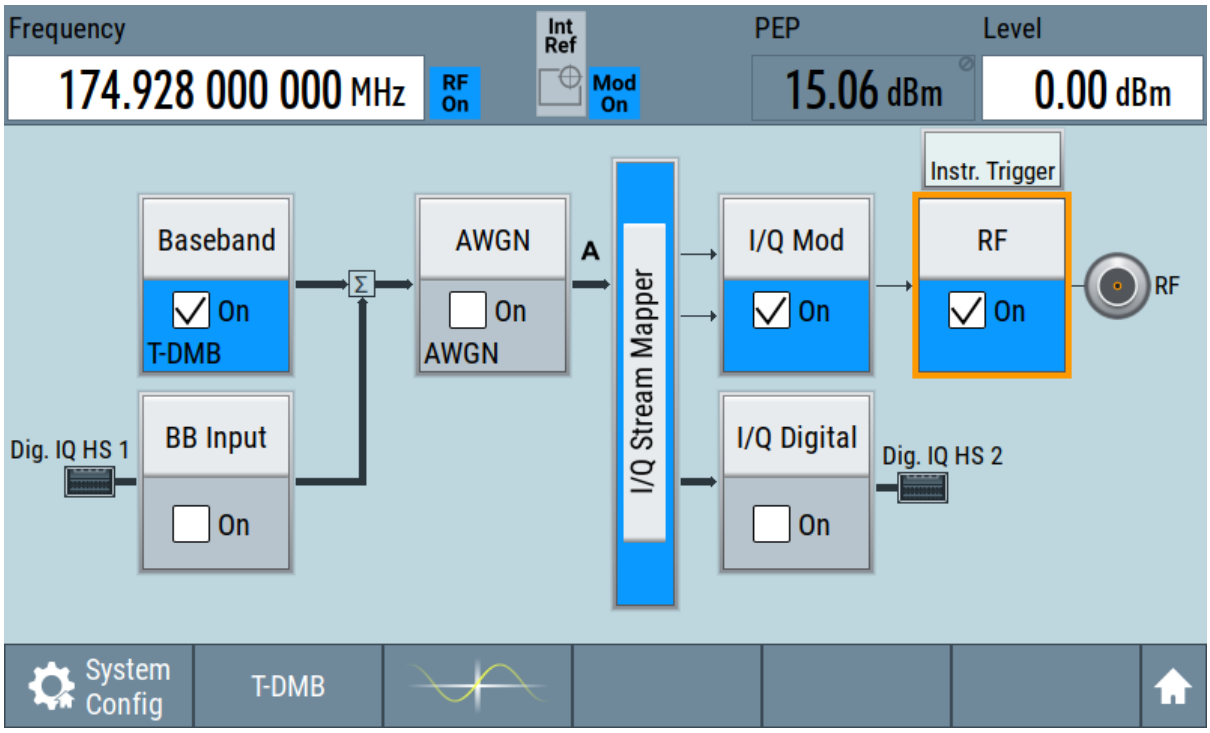

The instrument generates a DAB test signal with the set frequency, and level.

With these first steps, you have gained an impression of the provided functionality.

For a comprehensive description of the full range of capabilities, refer to the user manual "DAB Digital Standard for R&S SMCV100B".

7 System overview

This section helps you to get familiar with the R&S SMCV100B. It provides an introduction to the general concept of the instrument. This section also introduces the main blocks in the signal generation flow.

For information on how to access functions and interact with the R&S SMCV100B, refer to Chapter 8, "Instrument control", on page 66.

7.1 Brief introduction to the instrument's concept

The R&S SMCV100B offers excellent RF and baseband characteristics. The baseband section of the R&S SMCV100B is fully digital. It contains the hardware for generating and processing I/Q signals in realtime or generating signals with an arbitrary waveform generator.

7.2 Signal flow at a glance

The R&S SMCV100B is equipped with a large touchscreen, that displays a block diagram. The block diagram represents the signal flow and the general stages the signal generation goes through. Depending on the options the R&S SMCV100B is equipped with, the appearance of the block diagram changes.

The following examples do not cover all possible cases but aim to introduce the way the block diagram depicts the installed options.

- Minimum configuration example of a base unit and frequency option R&S SMCVB-B103.

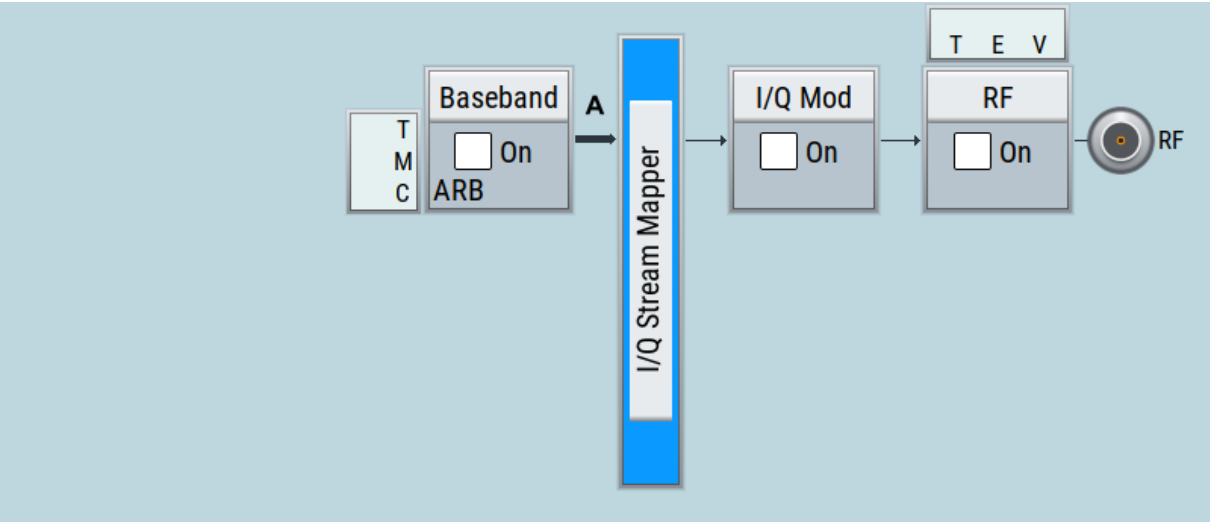

- An example of a fully equipped instrument.
  The block diagram displays all blocks for installed software options. Arrows within the block diagram indicate the signal flow.

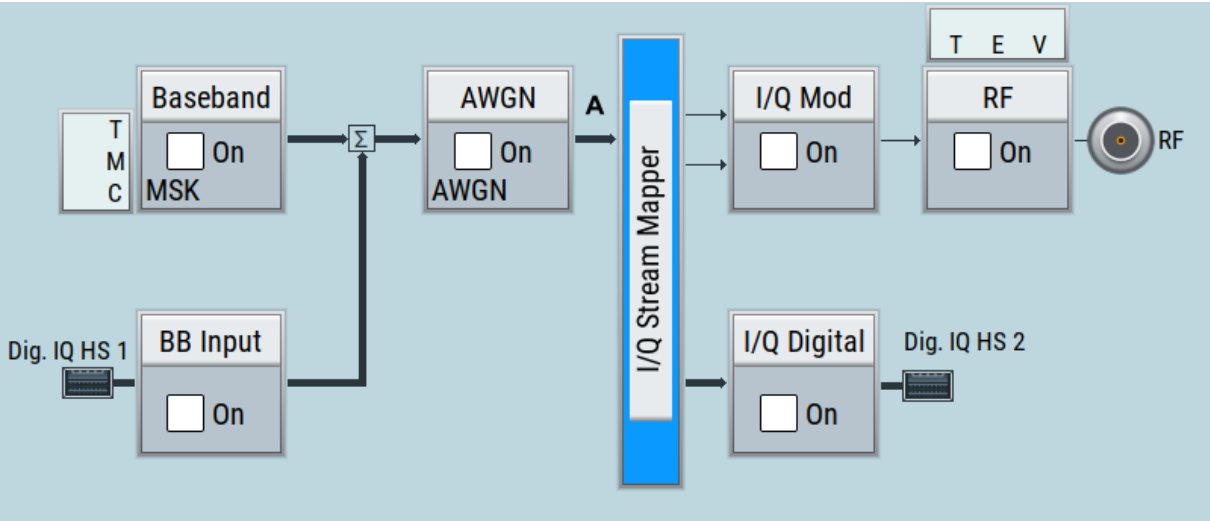

The cross-reference between the installed options and the displayed settings

The Table 7-1 is an excerpt of the available options and lists only the options required *to display* a functional block in the block diagram. The information assumes R&S SMCV100B minimum configuration comprising base unit and frequency option R&S SMCVB-B103.

For exact information on the available options, and on the minimum requirements and the interdependencies between the provided options, refer to the R&S SMCV100B data sheet.

Table 7-1: Required options per functional block (excerpt)

Functional block	Required option
"Baseband"	-
"BB Input"	R&S SMCVB-K19
"AWGN"	R&S SMCVB-K62
"I/Q Stream Mapper"	-
"I/Q Mod"	-
"I/Q Digital"	R&S SMCVB-K19
"RF"	-

7.3 Internal baseband source ("Baseband" block)

The "Baseband" block represents the source of the baseband signals (basebands).

This functional block is the access point to:

- *The internal baseband generator*
  The baseband generator contains modules for real-time signal generation ("Custom Digital Modulation" requires R&S SMCVB-K199) and an arbitrary waveform generator (ARB).
- *The available digital standards*
  Generation of digital signals in accordance with the supported standards requires additional software options. For example, option R&S SMCVB-K162 generates signals according to the ATSC 3.0 standard.
- *The baseband offsets function*
  Signals from the baseband generator can be shifted in frequency and phase.

7.4 Digital baseband input/output ("BB input"/ "I/Q digital" block)

The "BB Input" and the "I/Q Digital" blocks are the access point to the settings of the digital interfaces Dig. IQ HS x.

Equipped with option R&S SMCVB-K19, the R&S SMCV100B is able to receive digital baseband signals and to output digital baseband signals. You can use both interfaces in parallel: Dig. IQ HS 1 is input and Dig. IQ HS 2 is output of the digital baseband signals.

The digital baseband inputs and outputs can be used together with other Rohde & Schwarz instruments, like signal generators. A Rohde & Schwarz signal generator for instance can serve as digital signal source in test configuration requiring two baseband sources.

The "BB Input" block is the access point to the settings of:

- *The external digital I/Q signals*
  The external digital I/Q signals are further processed in the baseband section.
- *The baseband offsets function*
  The external and internal baseband signals can be shifted in frequency and phase.

The "I/Q Digital" block is the access point to the settings of the digital I/Q output signals.

7.5 Additional white gaussian noise ("AWGN" block)

The "AWGN" block is displayed only in instruments equipped with the option R&S SMCVB-K62. This block controls the additional white Gaussian noise generator (AWGN). An additive white noise is required for measurements of mobile radio base stations.

7.6 "I/Q stream mapper" block

As one of the access points to the system configuration settings, the "I/Q Stream Mapper" provides direct access for mapping the generated I/Q streams to the available output connectors. That is, to the RF 50 Ω output connector and to the Dig. IQ HS 2 output connectors.

7.7 I/Q modulator ("I/Q mod" block)

The "I/Q Mod" block represents the I/Q modulator.

This functional block is the access point to:

- The I/Q modulation of the internal baseband signal
- The digital I/Q impairments

7.8 RF ("RF" block)

The "RF" block represents the RF settings of the instrument.

This block is the access point to:

- RF frequency and level settings, and the reference frequency, user correction, etc.
- The list and sweep modes

7.9 Applications examples of the R&S SMCV100B

The R&S SMCV100B can be optimally adapted to the requirements of different applications:

- Generation of digitally modulated signals using
  - The internal baseband generator
  - The externally applied digital baseband signals
- Generation of wanted signals or interfering signals for receiver tests
- Generation of signals with up to 240 MHz signal bandwidth (R&S SMCVB-K523)

8 Instrument control

This chapter provides an overview on how to work with the R&S SMCV100B.

It covers the following topics:

- Possible ways to operate the instrument 66
- Means of manual interaction 67
- Understanding the display information 67
- Accessing the functionality 73
- Entering data 74
- Getting information and help 76
- Remote control 78
- Remote operation over VNC 79

8.1 Possible ways to operate the instrument

There are three ways to operate the R&S SMCV100B:

- Manual operation:
  Use the touchscreen, hard keys and rotary knob, or an optional mouse and/or keyboard.
  The following description shows how to operate the instrument manually.
- Remote control:
  Create programs to automatize repeating settings, tests and measurements. The instrument is connected to a computer running the program.
  This way of operation is described in the user manual, chapter "Network and Remote Control Operation".
- Remote operation from a computer:
  Remote monitoring and control of the instrument from a connected computer is based on the common cross-platform technology VNC (Virtual Network Computing). On the remote computer, any standard web browser (supporting Java) or a dedicated VNC client (like Ultr@VNC) can be used. See also Chapter 8.8, "Remote operation over VNC", on page 79.

8.2 Means of manual interaction

For the manual interaction with the R&S SMCV100B, you have several methods that you can use as an alternative to perform a task:

- Touchscreen:
  Touchscreen operation is the most direct way to interact. Almost all control elements and actions on the screen are based on the standard operating system concept. You can tap any user interface element to set parameters in dialog boxes, enter data, scroll within a dialog etc., as if you work with a mouse pointer.

  Tapping the screen works like clicking mouse buttons:
  - Touch quickly = click: Selects a parameter or provokes an action.
  - Touch and hold = right-click: Opens a context-sensitive menu.
  - Touch and swipe = drag: Scrolls through the contents of a display element larger than the screen, e.g. a list or a table.
- Function keys and rotary knob:
  The front panel provides nearly all functions and controls to operate the instrument in the classic way, without touchscreen.
- Optional mouse and/or keyboard:
  These devices work like known from PCs. The navigation keys on the front panel correspond to the keys on the keyboard.

This manual describes the manual interaction with the instrument via the touchscreen. It mentions the alternative methods using the keys on the instrument or the on-screen keypads if it deviates from the standard operating procedures. The usage of the touchscreen and navigation keys is described in Chapter 8.4, "Accessing the functionality", on page 73.

Throughout the manual, the term "select" refers to any of the following methods:

- Using a finger on the touchscreen
- Using a mouse pointer in the display
- Using a key on the instrument or on a keyboard

8.3 Understanding the display information

The block diagram of the R&S SMCV100B displays all main settings and generator states, divided into three main operation areas.

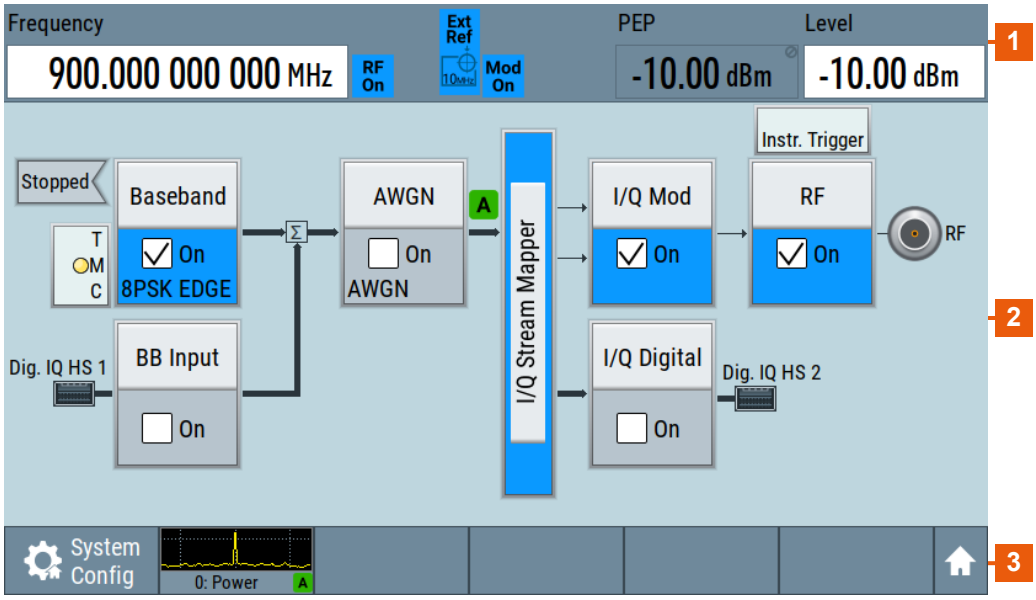

Figure 8-1: Block diagram

1 = Status bar (frequency and level display)
2 = Block diagram
3 = Taskbar/softkey bar

- Status bar 68
- Block diagram 69
- Taskbar 70
- Additional display characteristics 71

8.3.1 Status bar

The status bar at the top of the screen indicates the RF frequency and the level of the output signal provided to the DUT. You can set both parameters directly here.

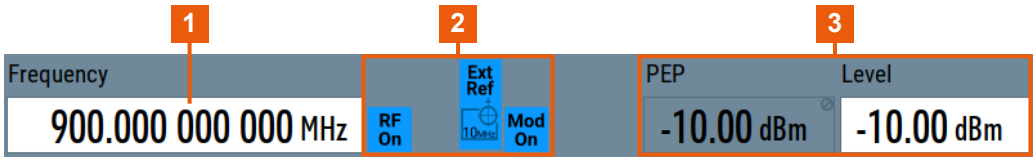

1 = Frequency display
2 = Status buttons
3 = Level display

The status buttons indicate key parameters that are set for the output signal. Most of the status buttons are virtual keys you can use to open a corresponding menu or dialog.

8.3.2 Block diagram

The block diagram shows the current configuration and the signal flow in the generator with the aid of function blocks, connected by signal lines. The following figure displays the most common elements that can appear in the block diagram. However, it does not necessarily represent a useful configuration.

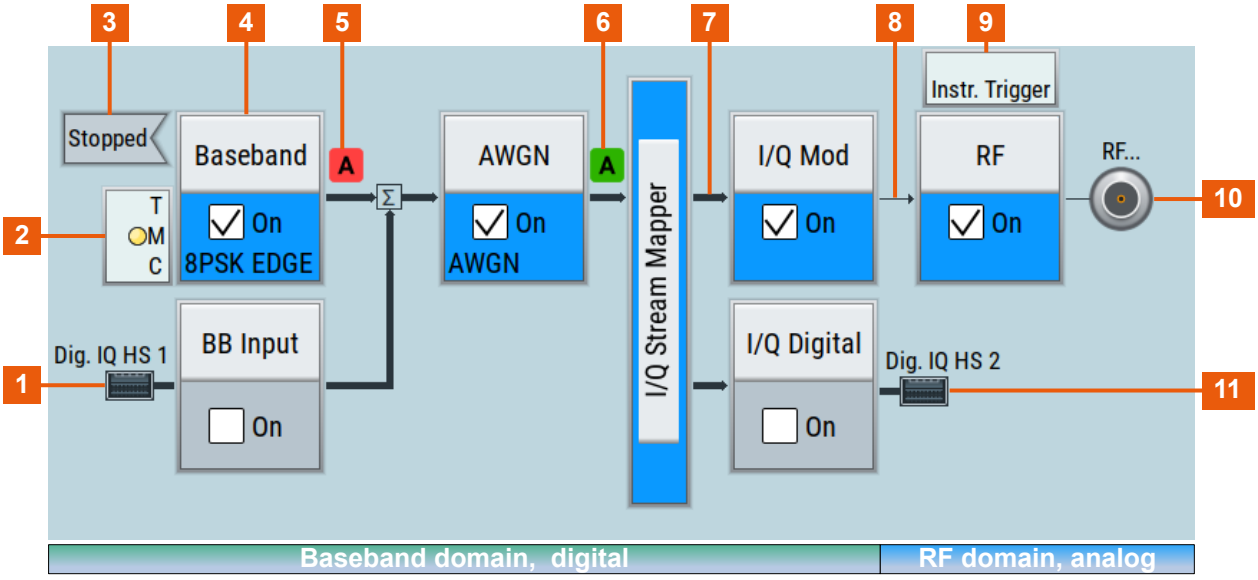

1, 10, 11 = Connector icons (digital, RF)
2, 9 = Control signal block
3 = Status indicator
4 = Functional block
5, 6 = Graphics indicator
7 = Signal line (digital)
8 = Signal line (analog)

Starting from left up to the "I/Q Mod" functional block, you can see the functional blocks provided in the baseband domain. After the I/Q modulation on the analog RF carrier, the analog section implies the routing to the "RF" functional block.

Legend	Item	Description
1, 10, 11	Connector icon	Represents the interfaces for signal input and output. • Digital I/Q HS signal connector input and output (1, 11) • RF signal connector output (10) Icons vary depending on the frequency.
2, 9	Control signal block	Indicates information on the control signals like signal content, input or output and provides quick access to the corresponding configuration dialog. A dedicated control block is displayed to the left of the baseband block (2) and above the RF block (9).
3	Status indicator	Indicates whether the signal is running or waiting for a trigger.
4	Functional block	Represents a basic task in signal generation. The push button provides access to any number of associated actions to accomplish the task. The On/Off (checkbox) and the block label quickly activates the basic task.
5, 6	Graphics indicator	Denotes that the signal is displayed graphically: • Baseband signal after the baseband block (5) • Stream signal before mapping (6)
7, 8	Signal line • digital • analog	Shows the currently configured signal flow: • Thick lines represent digital I/Q streams (7). • Thin lines represent analog signals (8).

8.3.3 Taskbar

The "Taskbar" contains labeled softkeys and minimized views (thumbnails) of active graphics and dialogs.

Initially, it shows the permanently assigned softkeys. The softkey with the sine wave denotes that no signal is activated for graphical representation.

Figure 8-2: Taskbar in default state

Whenever you open a settings or graphics dialog, it is automatically assigned to the "Taskbar". The softkeys shown in the following figure represent the variants.

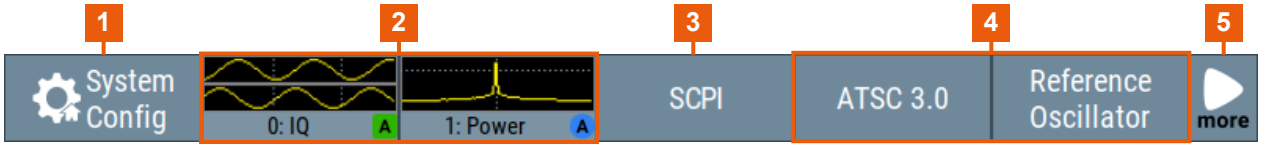

Figure 8-3: Taskbar fully assigned

1 = System configuration
2 = Graphics
3 = Remote control connections
4 = Dialogs
5 = Diagram / more

1	System Config	Provides access to general system configurations like setup, display, or remote.
2	Graphics	Shows that a signal is represented graphically.
3	Remote	Shows the established remote connections when the instrument is remotely controlled. **Tip:** An indicator in the status bar shows the current remote control status.
4	Dialogs	Shows a dialog as a thumbnail, the dialog name, and the name of signal channel.
5	Diagram / more	The diagram icon as shown in Figure 8-2 minimizes all dialogs indicated on the screen. The block diagram is in the foreground. The "More" softkey indicates that more dialogs are open than can be displayed in the taskbar. Use this softkey to open a selection list with the remaining active dialogs, and the "Diagram" function.

8.3.4 Additional display characteristics

The following section provides a short insight on the indication of the screen in general, and significant elements that you see under specific operating modes, in dialogs or settings.

- **Appearance of active elements**
  - *Active* elements like On/Off switches, state buttons have a **blue** background.
  - *Selected* elements are framed or highlighted **orange**.
  - *Inactive* elements are **gray**.
- **On-Screen keypads**

As additional means of interacting with the instrument without having to connect an external keyboard, either a numerical or alphanumerical on-screen keypad appears when you activate an entry field (see Chapter 8.5, "Entering data", on page 74).

- **Info line**
  The "Info line" shows brief status information and error messages. It appears when an event generates a message. If selected, the R&S SMCV100B shows information on static errors and the error history.

- **Key parameters indicated in tab labels**
  Most dialogs are divided into tabs with logically grouped parameters. The tab label expresses the content and can also contain status indicators or the set value of a key parameter.

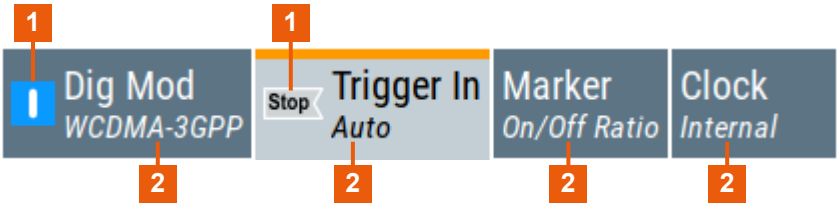

1 = Status indicators
2 = Key parameter values

- **Scroll bar handle**
  An arrow icon that appears when you touch a scroll bar helps you to scroll in a dialog or list.
- **Progress indicators**
  A busy icon indicates a currently running process. If a process takes some time, a progress bar shows the current state.
- **Context-sensitive menus**
  Within the entire screen display, including single parameters, you can access context-sensitive menus that provide some additional functions.

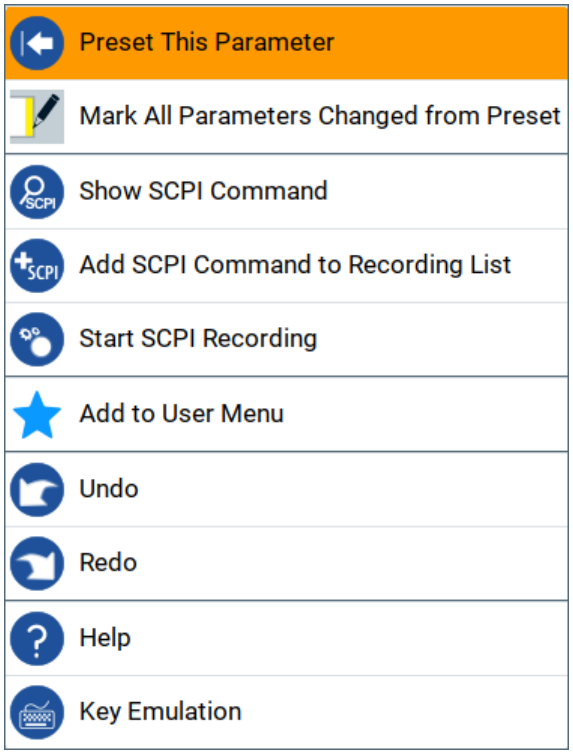

8.4 Accessing the functionality

All functionalities are provided in dialog boxes as known from computer programs. You can control the instrument intuitively with the touchscreen. This section provides an overview of the accessing methods.

The instrument's functions and settings can be accessed by selecting one of the following elements:

- System and function keys on the front panel of the instrument
- Taskbar/softkeys on the touchscreen
- Context-sensitive menus for specific elements on the touchscreen, or with the rotary knob (press and hold).
- Elements on the status bar in the touchscreen
- Displayed setting on the touchscreen, that means block diagram and all settings available in dialogs.

To open a dialog box

► Perform one of the following actions:

- Tap the required block, and then the menu entry.
- Tap the minimized view (thumbnail) on the taskbar.

Some of the utility keys access a dedicated dialog, too.

To minimize a dialog box

► To return to the block diagram, tap the "Home" button.

To close a dialog box

To close a dialog box, you have the same controls as you know from computers or devices with touchscreen.

► Perform one of the following actions:

- Tap the "Close" icon in the upper right corner.
- Press the [Esc] key on the front panel.
- Drag and drop a minimized dialog from the taskbar to the block diagram.

To select an option in a dialog box

► Tap the required option.

To select an option in a list

If many options are available - for example, for the trigger mode - the options are provided in a list. The current selection is shown on the list button.

1. Tap in the list.
2. To navigate through the list, try out the following:
   - Using a mouse, scroll in the list, tap the required option.
   - Use the rotary knob.

8.5 Entering data

Some parameters have their own key on the front panel.

For data input in dialog boxes, the instrument provides on-screen keypads for entering numeric and alphanumeric values. Thus, you can always set the parameters via the touchscreen, the front panel, or an external keyboard.

To correct an entry

1. Using the arrow keys, move the cursor to the right of the entry you want to delete.
2. On the on-screen keyboard, press "Clear".
3. Enter your correction.

To complete the entry

► On the on-screen keyboard, press "Enter" ↵.

To abort the entry

► Press the [Esc] key.
The dialog box closes without changing the settings.

8.5.1 Entering numeric parameters

To enter values with the on-screen keypad

For numeric settings, the instrument displays the numeric keypad. The units specified correspond to the units of the parameter.

1. Enter the numeric value.

   Tip: For quick entry, you can enter a value in exponential representation, e.g. *1e7* for *10000000*.

2. Tap the unit button to complete the entry.

   The unit is added to the entry.

   Tip: For quick unit change, you can enter shortcuts, e.g. for a frequency value *1e8h* for *100 MHz*.
   For an overview of shortcuts supported by the R&S SMCV100B, see chapter "Unit Shortcuts" in the appendix of the user manual.

3. If the parameter does not require a unit, confirm the entered value by pressing "Enter".

If you edit numeric data in tables, the entry field must be in edit mode: Press the rotary knob to activate the edit mode.

8.5.2 Entering alphanumeric parameters

If a field requires alphanumeric input, you can use the on-screen keyboard to enter letters and (special) characters.

8.5.3 Undo and redo actions

Accessed via the context-sensitive menus, "Undo" allows you to restore one or more actions on the instrument. Depending on the available memory, the "Undo" steps can restore all actions.

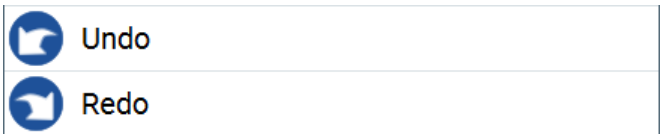

"Redo" restores a previously undone action.

8.6 Getting information and help

In some dialog boxes, graphics are included to explain the way a setting works.

For further information, you can use the following sources:

- Tooltips give the value range of the parameter.
- The context help provides functional description on a setting.
- The general help explains a dialog box, provides instructions, and general information.

To display context help

► To access a help topic, perform one of the following:

a) Tap and hold the parameter for which you need information and tap "Help" in the context menu.
b) Tap the parameter and press the [Help] key.

The "Help" dialog opens. You can browse the help for further information.

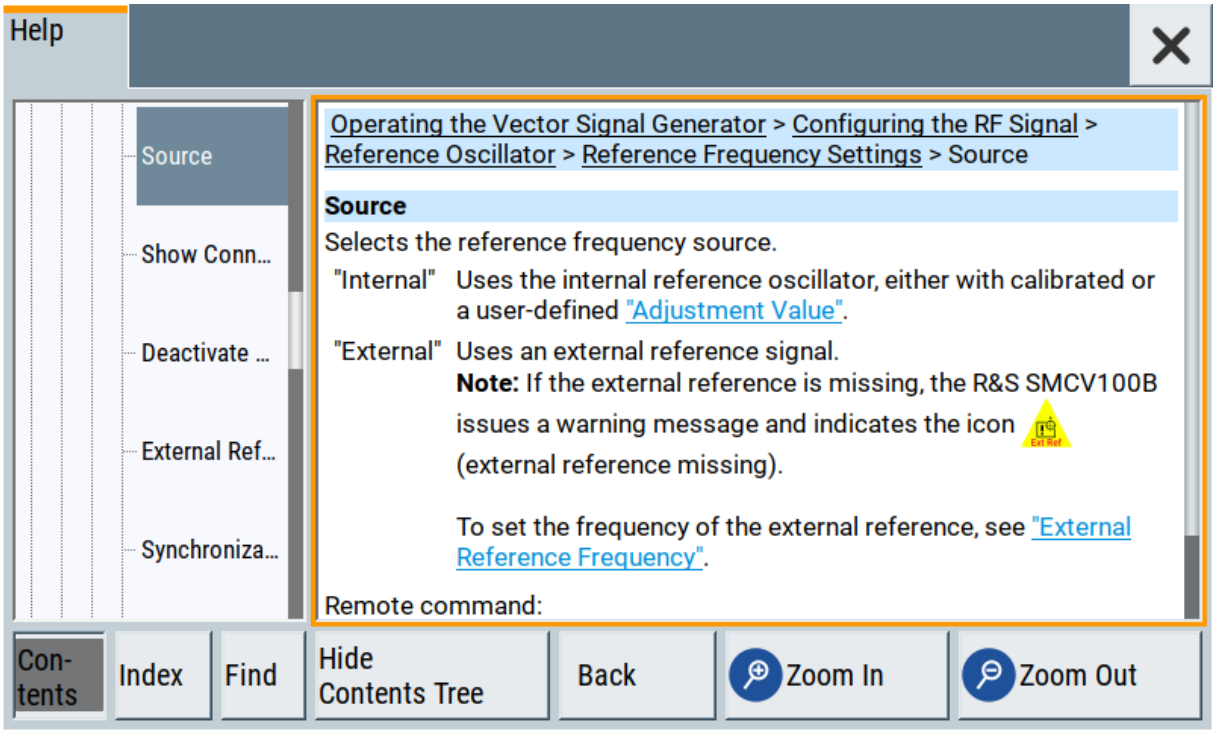

Contents of the help dialog box

The help dialog box covers two main areas:

- "Contents" - contains a table of help contents
- "Topic" - contains a specific help topic

The help system also provides an "Index" and a "Find" area, and "Zoom" functions that are accessed via the corresponding buttons.

To open general help

► Press the yellow [Help] key on the front panel.

If a dialog box is opened, the help topic for the current tab is shown. Otherwise the "Contents" page appears.

Navigating in the table of contents and in the help topics

1. To move through the displayed contents entries, tap on an entry and scroll or use a connected mouse.
   Entries with a plus sign contain further entries.
2. To display a help topic, tap on the topic name or double-click the topic name.
3. To follow a cross-reference, tap on the link text.

4. To return to the previous page, select "Back".
   This function scrolls back all steps you have performed before.
5. Use the "scroll bars" to shift the visible section of content shown.
6. To maximize the "Topics" area, tap the "Hide Contents Tree" button to hide the contents tree.

Using the index

1. Select the "Index" button.
2. Enter the first characters of the topic you are interested in.
   The entries starting with these characters are displayed.
3. Tap on the index entry.

   The corresponding help topic is displayed.

8.7 Remote control

In addition to working with the R&S SMCV100B interactively, located directly at the instrument, it is also possible to operate and control it from a remote PC.

The R&S SMCV100B supports various methods for remote control:

- Connecting the instrument to a LAN (see Chapter 4.7, "Connecting to LAN", on page 20)
- Using the LXI browser interface in a LAN

For remote control, you can use the R&S VISA (Virtual Instrument Software Architecture) library provided for download at the Rohde & Schwarz website http://www.rohde-schwarz.com/rsvisa.

How to configure the remote control interfaces is described in the user manual, chapter "Network and Remote Control Operation".

8.8 Remote operation over VNC

The VNC is an application which can be used to access and control the instrument from a remote computer through a LAN connection. While the instrument is in operation, the instrument screen contents are displayed on the remote computer, and VNC provides access to all applications, files, and network resources of the instrument. Thus, remote operation of the instrument is possible.

Instrument control from a remote computer

To access the basic utility functions of the R&S SMCV100B, perform a right mouse click the block diagram and select "Key Emulation".

A key panel to the right of the block diagram gives access to the utility functions provided by the front panel keys.

The VNC is an add-on program, included in operating system Linux/Unix, and available as a free-of-charge download on the internet.

For more information, refer to the R&S SMCV100B user manual, chapter "How to Set Up Remote Operation via VNC".

9 Contacting customer support

Technical support – where and when you need it

For quick, expert help with any Rohde & Schwarz product, contact our customer support center. A team of highly qualified engineers provides support and works with you to find a solution to your query on any aspect of the operation, programming or applications of Rohde & Schwarz products.

Contact information

Contact our customer support center at www.rohde-schwarz.com/support, or follow this QR code:

Figure 9-1: QR code to the Rohde & Schwarz support page

Index

A

Active elements 71
Alphanumeric parameters 76
Application cards 14
Application notes 14
ARB 63

B

Baseband
  Input 63
  Output 63
Baseband generator 63
BB input 63
BB output 63
Bench top, placing 17
Block diagram
  Display 69
Brochures 13

C

Carrying the instrument 16
Checking the instrument 16
Connecting
  Keyboard 22
  LAN 20
  Memory stick 22
  Monitor 21
  Mouse 22
  Power 20
  To Dig. IQ HS x 26
  To IP Data 27
  To Ref In/Ref Out 25
  To RF 25
  To RF coaxial connectors 23
  USB devices 22
Connecting to RF coaxial connectors
  To connect to pluggable connectors ... 24
  To connect to screwable connectors ... 24
  To prepare for connecting 23
Connector
  AC power supply 36
  Display Port 36
  High-speed digital IQ 37
  IP data 37
  LAN 37
  Ref In 38
  Ref Out 38
  RF 50 Ω 35
  USB 35, 37
  USER 37
Context-sensitive menu 71
Custom digital modulation 63
Customer support 80

D

Data entry 74
Data sheets 13
Dialog boxes 73
Digital standard 63
Display
  Active elements 71
  Block diagram 69
  Context-sensitive menu 71
  Info line 71
  Information 67
  On-screen keypad 71
  Status bar 68
  Tab labels 71
  Taskbar 70
Display port
  Connector 36
Documentation overview 12

E

Emulating front panel keys 79

F

Firmware options
  see software options 63
Front panel
  Connectors 35
  Overview 31
Function keys
  Details - see user manual 33
  Overview 33

G

Getting started 12

H

Head panel
  see Status bar 32

Header
see Status bar 32
Help 12, 76
Hotspot 70

I

Info line 71
Input connector 37
Instrument
Carrying 16
Checking 16
Lifting 16
Operating site 16, 17
Unpacking 16
Instrument control 66
Instrument help 12
Instrument security procedures 13

K

Key
★ (User) 34
Access on a remote computer 79
Emulation 79
Esc 34
Freq/Level 34
Help 33
Home 34
On/Standby 33
Preset 33
RF on/off 34
Save/Rcl 33
Keyboard
On-screen 74
Usage 67
Keypad
On-screen 74

L

LAN
Connecting 20
Environment 20
Lifting the instrument 16
Loading
Trying out 56

M

Manual interaction 67
Mounting, in a rack 18
Mouse
Usage 67

N

Network
Environment 20
Numeric data entry 74
Numeric parameters 75

O

On-screen keyboard 76
On-screen keypad 71
Open source acknowledgment (OSA) 14
Operating site
Choosing 16
Setting up the instrument 17
Operation
Manual 67
Options
see user manual 63
Output connector 37
Output connectors
RF 50 Ω 35

P

Parameters
Entering 75, 76
Placing, on a bench top 17
Power
Connecting the instrument 20
Power on
Key 33
Power supply
Connector 36
Preparing for use 16

R

Rack, mounting 18
Rear panel
Overview 35
Release notes 14
Remote access
see Remote operation from a computer
..... 66
Remote control 78
Remote operation 79
RF 50 Ω connector 35
Rotary knob 34

S

Safety instructions 7, 13

Saving
Trying out 55
Security procedures 13
Serial number 36
Service manual 13
Softkey bar
see Taskbar 70
Software options 63
Standby
Key 33
Status bar
Display 68
Switching
On or off 28

T

Tab labels 71
Text entry 74
Tooltips
Show 76
Touchscreen
Compared with mouse 67
Overview 32
Usage 67

U

Unpacking the instrument 16
User manual 12
Utility keys
Details - see user manual 33
Overview 33

V

VNC
Using in a LAN 79

W

White papers 14